Addendum No. 3
22 July 2015
Project No. 1419

Newport Aquatic Center and Sitework
225 SE Avery Street
Newport, OR 97365

REGISTERED ARCHITECT
James M. Robertson
EUGENE, OREGON
STATE OF OREGON

Robertson/Sherwood/Architects pc
132 East Broadway – Suite 540
Eugene, Oregon 97401

This Addendum forms a part of the Contract Documents and modifies the original Documents dated 17 June 2015 as noted below. Acknowledged receipt of this Addendum is required. Failure to do so may subject the Bidder to disqualification.

B I D D I N G R E Q U I R E M E N T S

1. SECTION 00 11 13 – INSTRUCTIONS TO BIDDERS

   A. Bid Security: Revise to read:
   "Bidder shall submit a separate Bid Bond, Certified Check, Cashier's Check, Savings and Loan Secured Check or irrevocable Letter of Credit issued by a financial institution for ten percent (10%) for each of the bid packages (Bid Package A and Bid Package B). The Bid Bond Form in Volume 1 of Bid Package A to also be submitted, to cover Bid Package A only."

P A C K A G E A - V O L U M E 1 (CONTRACT DOCUMENTS)

2. DOCUMENT C-430 – BID BOND

   A. Replace Document C-430 with revised Document included with this Addendum.

P A C K A G E B - P R O J E C T M A N U A L

3. SECTION 10 14 00 – SIGNAGE

   A. Article 1.01: Add the following item:

      "C. Labels at fire rated walls."

   B. Article 2.01: Add the following item:

      "B. Fire Rated Wall Labels:
      1. Use self-adhering labels; 4 inch minimum high polyester label with text not less than 3 inches high; water-proof; white background with black text.
      2. Apply to wall surfaces. Locate within 15 feet of the end of fire walls and at intervals not exceeding 30 feet measured horizontally along the wall. Refer to Drawings for location of fire walls.
      3. Label Text: FIRE WALL – PROTECT ALL OPENINGS"

4. SECTION 22 42 00 – COMMERCIAL PLUMBING FIXTURES

   A. Paragraph 2.02.B: Add Item 4, to read:

      "4. Mount at ADA height; 17 inches maximum to rim."

5. SECTION 26 24 13 – SWITCHBOARDS/DISTRIBUTION PANELS

   A. Add Section 26 24 13, included with this Addendum:

PACKAGE B - SHEET DRAWINGS

6. SHEET G1.1 - EXITING PLAN

   A. At the electrical room, add a fire extinguisher, mounted adjacent to the hinge side of the door.

7. SHEET A1.1 - FLOOR PLAN

   A. At Electrical 155, add a fire extinguisher, mounted adjacent to the hinge side of the door.

8. SHEET A1.3 – ROOF PLAN

   A. General Roof Plan Notes, Note H: Change the depth of the acoustical metal deck from 3 inches to 2 inches.

9. SHEET A2.6 – WALL SECTIONS

   A. B/A2.6: At Roof Assembly description, change the depth of the acoustical metal deck from 3 inches to 2 inches.

10. SHEET A5.1 – SCHEDULES

    A. Frame and Window Types: For Frame Type 5, change the glazing type from CG to CSG.

11. SHEET S1.1 - STRUCTURAL GENERAL NOTES

    A. Replace Sheet S1.1 with new Sheet S1.1 included with this Addendum.

12. SHEET S1.2 - STRUCTURAL GENERAL NOTES

    A. Replace Sheet S1.2 with new Sheet S1.2 included with this Addendum

13. SHEET S2.2 - STRUCTURAL ROOF FRAMING PLAN

    A. Replace Sheet S2.2 with new Sheet S2.2 included with this Addendum

14. SHEET S5.2 - STRUCTURAL ROOF FRAMING DETAILS

    A. Replace Sheet S5.2 with new Sheet S5.2 included with this Addendum

APPROVALS - PACKAGE B

The following are approved based on information submitted to the Architect. Approval does not alter requirements of the Specifications or Drawings except where specifically noted otherwise. Contractor shall coordinate installation of approved products which the Contractor elects to use making such changes as may be required for the Work to be completed in all respects:

Section	Item	Product/Manufacturers
23 21 19	Automatic Flow Control Valves	Nutech
23 33 00	Manual Balancing Damper	Nailor
23 34 00	In-Line Direct Drive Centrifugal Fan	Twin City Fans
23 37 00	Ceiling Supply Diffuser	Nailor
23 37 00	Supply Air Grille	Nailor
23 37 00	Return Air Grille	Nailor
23 37 00	Door Transfer Grille	Nailor
23 72 00	Air-to-Air Heat Recovery Equipment	Haakon
26 24 16	Panelboards	GE A-Series II
26 31 00	Solar Panels	Solarworld SW250
26 51 13	Indoor Lighting Fixtures; Type F	Day-Brite V2 Series
26 51 13	Indoor Lighting Fixtures; Type FE	Day-Brite V2 Series

END OF ADDENDUM NO. 3

BID BOND

DATE_____

Any singular reference to Bidder, Surety, Owner or other party shall be considered plural where applicable.

BIDDER *(Name and Address)*:

SURETY *(Name, and Address of Principal Place of Business)*:

OWNER *(Name and Address)*:
City of Newport
169 SW Coast Highway
Newport, OR 97365

BID
Bid Due Date: July 29th, 2015
Description *(Project Name— Include Location)*: ***Newport City Hall Parking Expansion and Access Improvements*** - **PACKAGE A**
City Hall Campus at 169 SW Coast Highway, Newport, OR 97395

BOND
Bond Number:
Date:
Penal sum _____ $ _____
(Words) (Figures)

Surety and Bidder, intending to be legally bound hereby, subject to the terms set forth below, do each cause this Bid Bond to be duly executed by an authorized officer, agent, or representative.

BIDDER	**SURETY**
_____ (Seal)	_____ (Seal)
Bidder's Name and Corporate Seal	Surety's Name and Corporate Seal
By: _____	By: _____
Signature	Signature (Attach Power of Attorney)
_____	_____
Print Name	Print Name
_____	_____
Title	Title
Attest: _____	Attest: _____
Signature	Signature
Title	Title

Note: Addresses are to be used for giving any required notice.
Provide execution by any additional parties, such as joint venturers, if necessary.

1. Bidder and Surety, jointly and severally, bind themselves, their heirs, executors, administrators, successors, and assigns to pay to Owner upon default of Bidder the penal sum set forth on the face of this Bond. Payment of the penal sum is the extent of Bidder's and Surety's liability. Recovery of such penal sum under the terms of this Bond shall be Owner's sole and exclusive remedy upon default of Bidder.

2. Default of Bidder shall occur upon the failure of Bidder to deliver within the time required by the Bidding Documents (or any extension thereof agreed to in writing by Owner) the executed Agreement required by the Bidding Documents and any performance and payment bonds required by the Bidding Documents.

3. This obligation shall be null and void if:

3.1 Owner accepts Bidder's Bid and Bidder delivers within the time required by the Bidding Documents (or any extension thereof agreed to in writing by Owner) the executed Agreement required by the Bidding Documents and any performance and payment bonds required by the Bidding Documents, or

3.2 All Bids are rejected by Owner, or

3.3 Owner fails to issue a Notice of Award to Bidder within the time specified in the Bidding Documents (or any extension thereof agreed to in writing by Bidder and, if applicable, consented to by Surety when required by Paragraph 5 hereof).

4. Payment under this Bond will be due and payable upon default of Bidder and within 30 calendar days after receipt by Bidder and Surety of written notice of default from Owner, which notice will be given with reasonable promptness, identifying this Bond and the Project and including a statement of the amount due.

5. Surety waives notice of any and all defenses based on or arising out of any time extension to issue Notice of Award agreed to in writing by Owner and Bidder, provided that the total time for issuing Notice of Award including extensions shall not in the aggregate exceed 120 days from the Bid due date without Surety's written consent.

6. No suit or action shall be commenced under this Bond prior to 30 calendar days after the notice of default required in Paragraph 4 above is received by Bidder and Surety and in no case later than one year after the Bid due date.

7. Any suit or action under this Bond shall be commenced only in a court of competent jurisdiction located in the state in which the Project is located.

8. Notices required hereunder shall be in writing and sent to Bidder and Surety at their respective addresses shown on the face of this Bond. Such notices may be sent by personal delivery, commercial courier, or by United States Registered or Certified Mail, return receipt requested, postage pre-paid, and shall be deemed to be effective upon receipt by the party concerned.

9. Surety shall cause to be attached to this Bond a current and effective Power of Attorney evidencing the authority of the officer, agent, or representative who executed this Bond on behalf of Surety to execute, seal, and deliver such Bond and bind the Surety thereby.

10. This Bond is intended to conform to all applicable statutory requirements. Any applicable requirement of any applicable statute that has been omitted from this Bond shall be deemed to be included herein as if set forth at length. If any provision of this Bond conflicts with any applicable statute, then the provision of said statute shall govern and the remainder of this Bond that is not in conflict therewith shall continue in full force and effect.

11. The term “Bid” as used herein includes a Bid, offer, or proposal as applicable.

SWITCHBOARDS/DISTRIBUTION PANELS

PART 1 GENERAL

1.01 WORK INCLUDED

A. Furnish and install switchboards and distribution panels incorporating switching and protective devices of the number, ratings and type shown and noted herein. Switchboards to include necessary interconnections, instrumentation and control wiring for a complete and satisfactory operating system.

1.02 QUALITY ASSURANCE

A. Minimum Standards:

1. NEMA AB-1: Molded Case Circuit Breakers.
2. NEMA KS-1: Enclosed Switches.
3. NEMA PB-2: Dead-Front Distribution Switchboards.
4. NEMA SG-5: Switchgear Assemblies.
5. UL 50: Cabinets and Boxes.
6. UL 869: Service Disconnects.
7. UL 891: Dead-Front Switchboards.

B. Acceptable Manufacturers: Cutler-Hammer, Square D, Siemens, General Electric.

C. Source Quality Control: Switchboards completely factory assembled, wiring and tested before delivery.

1.03 SUBMITTALS

A. Shop Drawings:

1. Certified elevations, power and control diagrams, material list.
2. Individual circuit breakers, switches, ground fault, instrumentation.

B. Tripping Coordination:

1. Tripping curves of adjustable circuit breakers and fuses.
2. Manufacturer's recommended settings of time delays and ground fault sensing adjustments of adjustable circuit breakers which demonstrate selective coordination.

C. Estimated short circuit minimum 42,000 AIC or as noted on Drawings.

PART 2 PRODUCTS

2.01 CONSTRUCTION

A. General:

1. Individual vertical sections shall be designed for bolting together at site with only electrical connection being main bus.
2. Each switching and circuit protective device to have visible ON/OFF IDENTIFICATION.

B. Frame:

1. Universal frame type using die-formed members bolted and braced through exclusive use of self-tapping bolts which will not loosen during shipment.
2. Provide adequate lifting means.

3. Base channels: Rugged steel to withstand stress of transit and moving into position. Shall have holes for bolting switchboard to floor. Sheet metal not to touch floor. Capable of bolting to floor without the use of floor sills.

C. Enclosure:

1. Dead front type, completely metal enclosed.
2. Self-supporting structure independent of wall supports.
3. Required number of vertical section bolted together to form one rigid switchboard approximately 90 inches high.
4. Depth: Adequate to accommodate safe mounting and connecting of equipment.
5. Vertical sections shall align front and rear.
6. Top and rear shall be covered with removable screw-on plates having formed edges all around.
7. Front plates shall be sectionalized and removable, fabricated from code gauge steel with formed edges all around.
8. Ventilation openings where required.
9. All covers secured by self-tapping screws, or screws with captive nuts.

D. Bussing:

1. Tin plated aluminum of sufficient size to limit temperature rise to 65°C based on UL tests.
2. Adequately braced and supported to withstand mechanical forces exerted during short circuit conditions from the indicated or calculated available short circuit current.
3. Connections tightly bolted using plated hardware.
4. A-B-C type bus arrangement, left-to-right, top-to-bottom, and front-to-rear, as viewed from the front.
5. Supply main bus splices between adjacent distribution sections.
6. Neutral Bus: Full size. Insulated from enclosure. Bond to ground bus in main service switchboard at one point, per code.
7. Ground Bus: 50% size. Furnish bus and lug extending entire length of switchboard. Firmly secure to each vertical section structure.

E. Conductors Lugs:

1. Aluminum Conductors: Compression type only, bolted to bus or CB output.
2. Copper Conductors: Compression or set-screw type, bolted to bus or CB output.

F. Finish: Exterior and interior steel surfaces properly cleaned and finished with industry standard gray baked enamel over a rust-inhibiting phosphatized primer coating approved by the paint manufacturer. All hardware to be plated.

2.02 STANDARD MOLDED CASE CIRCUIT BREAKERS (MCCB)

A. Branch molded case circuit breakers are to be totally front accessible and front connectable.

B. Breakers are to be mounted in switchboard to permit installation, maintenance, and testing without reaching over any line side bussing.

C. No common mounting brackets or electrical bus connectors.

D. Breaker connections requiring leaf and coil springs which could loosen or fly apart during a fault are not acceptable.

E. Where available, each breaker is to be furnished with an externally operable mechanical means to trip the circuit breaker, enabling maintenance personnel to verify the ability of the breaker trip mechanism to operate as well as exercising the breaker latch and operating mechanisms.

2.03 IDENTIFICATION

A. General:

1. Nameplate Location: On switchboard exterior, visible from working space.

B. Manufacturers Nameplates: Each vertical section to have a nameplate indicating manufacturer's name, switchboard type, ratings, bus bracing and factor order number.

C. Switchboard Nameplate:

1. Location: Switchboard top center.

2. Wording: "SWITCHBOARD" _____". 3/8 inch high letters minimum.

D. Service Disconnects:

1. Wording: "SERVICE DISCONNECT".

2. Location: Adjacent to each switch or breaker that serves to disconnect the utility power source.

E. Individual Switches and Breakers:

1. Wording: Indicate Load served; "MOTOR CONTROL CENTER MCA", "PANEL BB", etc.

2. Location: Adjacent to handle.

2.04 POWER ONE-LINE DIAGRAM

A. Mount new print of diagram from Drawings at main distribution assembly, under clear plastic cover, set in metal frame.

PART 3 EXECUTION

3.01 HOUSEKEEPING PAD

A. Size: 3-1/2 inch high; length and width to match equipment, or slightly larger.

B. Construction: Solid concrete. Form up with 2 x 4 lumber. Screed off top, trowel smooth. Dress top edge.

C. Where switchboards are installed over a combustible floor, provide suitable non-combustible material on the floor under the equipment in conformance with NEC 384.

3.02 INSTALLATION

A. Carefully align bus sections before bolting. Tighten with torque wrench.

B. Level and securely fasten switchboards to housekeeping pads.

C. Check all internal bus connections. Re-torque as required.

D. Provide cable supports for cables entering switchboards from point of entry to respective circuit protective device.

END OF SECTION

STRUCTURAL - GENERAL NOTES

GENERAL REQUIREMENTS

GOVERNING CODE: The design and construction of this project is governed by the **"Oregon Structural Specialty Code (OSSC)", 2014 Edition**, based on the **"International Building Code (IBC)", 2012 Edition**, hereafter referred to as the IBC, as adopted and modified by the City of **Newport, Oregon** understood to be the Authority Having Jurisdiction (AHJ).

REFERENCE STANDARDS: Refer to Chapter 35 of 2012 IBC. Where other Standards are noted in the drawings, use the latest edition of the standard unless a specific date is indicated. Reference to a specific section in a code does not relieve the contractor from compliance with the entire standard.

DEFINITIONS: The following definitions cover the meanings of certain terms used in these notes:

- "**Architect/Engineer**" – The Architect of Record and the Structural Engineer of Record
- "**Structural Engineer of Record" (SER)** – The structural engineer who is licensed to stamp & sign the structural documents for the project. The SER is responsible for the design of the Primary Structural System.
- "**Submit for review**" - Submit to the Architect/Engineer for review prior to fabrication or construction.
- "**Per Plan**" – Indicates references to the structural plans, elevations and structural general notes.
- **"Specialty Structural Engineer" (SSE) –** A professional engineer (PE or SE), licensed in the State where the project is located, (typically not the SER), who performs specialty structural engineering services for selected specialty-engineered elements identified in the Contract Documents, and who has experience and training in the Specialty. Documents stamped and signed by the SSE shall be completed by or under the direct supervision of the SSE.
- **"Bidder-designed" –** Components of the structure that require the general contractor, subcontractor, or supplier who is responsible for the design, fabrication and installation of specialty-engineered elements identified in the Contract Documents to retain the services of an SSE. Submittals of "Bidder-designed" elements shall be stamped and signed by the SSE.

SPECIFICATIONS: Refer to the project specifications issued as part of the contract documents for information supplemental to these drawings.

OTHER DRAWINGS: Refer to the architectural, mechanical, electrical, civil and plumbing drawings for additional information including but not limited to: dimensions, elevations, slopes, door and window openings, non-bearing walls, stairs, finishes, drains, waterproofing, railings, curtain walls, curbs, depressions, pools, mechanical unit locations, and other nonstructural items.

STRUCTURAL DETAILS: The structural drawings are intended to show the general character and extent of the project and are not intended to show all details of the work. Use entire detail sheets and specific details referenced in the plans as "typical" wherever they apply. Similarly, use details on entire sheets with "typical" in the name wherever they apply.

STRUCTURAL RESPONSIBILITIES: The structural engineer (SER) is responsible for the strength and stability of the primary structure in its completed form.

COORDINATION: The Contractor is responsible for coordinating details and accuracy of the work; for confirming and correlating all quantities and dimensions; for selecting fabrication processes; for techniques of assembly; and for performing work in a safe and secure manner.

MEANS, METHODS and SAFETY REQUIREMENTS: The contractor is responsible for the means and methods of construction and all job related safety standards such as OSHA and DOSH (Department of Occupational Safety and Health).

BRACING/SHORING DESIGN ENGINEER: The contractor shall at his discretion employ an SSE, a registered professional engineer for the design of any temporary bracing and shoring.

TEMPORARY SHORING, BRACING: The contractor is responsible for the strength and stability of the structure during construction and shall provide temporary shoring, bracing and other elements required to maintain stability until the structure is complete. It is the contractor's responsibility to be familiar with the work required in the construction documents and the requirements for executing it properly.

CONSTRUCTION LOADS: Loads on the structure during construction shall not exceed the design loads as noted in DESIGN CRITERIA & LOADS below or the capacity of partially completed construction as determined by the Contractor's SSE for Bracing/Shoring.

CHANGES IN LOADING: The contractor has the responsibility to notify the SER of any architectural, mechanical, electrical, or plumbing load imposed onto the structure that differs from, or that is not documented on the original Contract Documents (architectural / structural / mechanical / electrical or plumbing drawings). Provide documentation of location, load, size and anchorage of all undocumented loads in excess of **400** pounds. Provide marked-up structural plan indicating locations of any new equipment or loads. Submit plans to the Architect/Engineer for review prior to installation.

NOTE PRIORITIES: Plan and detail notes and specific loading data provided on individual plans and detail drawings supplements information in the Structural General Notes.

DISCREPANCIES: In case of discrepancies between the General Notes, Specifications, Plans/Details or Reference Standards, the Architect/Engineer shall determine which shall govern. Discrepancies shall be brought to the attention of the Architect/Engineer before proceeding with the work. Should any discrepancy be found in the Contract Documents, the Contractor will be deemed to have included in the price the most expensive way of completing the work, unless prior to the submission of the price, the Contractor asks for a decision from the Architect as to which shall govern. Accordingly, any conflict in or between the Contract Documents shall not be a basis for adjustment in the Contract Price.

SITE VERIFICATION: The contractor shall verify all dimensions and conditions at the site. Conflicts between the drawings and actual site conditions shall be brought to the attention of the Architect/Engineer before proceeding with the work.

ADJACENT UTILITIES: The contractor shall determine the location of all adjacent underground utilities prior to earthwork, foundations, shoring, excavation and prior to drilling holes for tieback anchors. Any utility information shown on the drawings and details is approximate and not necessarily complete.

ALTERNATES: Alternate products of similar strength, nature and form for specified items may be submitted with adequate technical documentation (proper test report, etc.) to the Architect/Engineer for review. Alternate materials that are submitted without adequate technical documentation or that significantly deviate from the design intent of materials specified may be returned without review. Alternates that require substantial effort to review will not be reviewed unless authorized by the Owner.

DESIGN CRITERIA AND LOADS

OCCUPANCY:	Risk Category of Building per 2012 IBC Table 1604.5 =	**III**

WIND DESIGN:	**MAIN WIND FORCE RESISTING SYSTEM**		
	Ultimate Design Wind Speed, V_{ULT} (MPH)		**145**
	Exposure Category		**C**
	Internal Pressure Coefficient	**Cpi =**	**+/- 0.18**
	Topographic Factor	**Kzt =**	**1.0**
	Wind Analysis procedure used:		**Envelope**
	COMPONENT & CLADDING PRESSURES for DESIGN (Ultimate)		**PSF**
	Wall Cladding, Typical Zone		**54**
	Wall Cladding, Edge Zone within **12** feet of corners		**65**
	Roof Cladding, Middle Zone		**46**
	Roof Cladding, Edge Zone within **12** feet of edge		**76**
	Roof Cladding, Corner Zone within **12** feet of corners		**115**
	Net Uplift Load (Ultimate: 0.9D+W)		**20**

SEISMIC DESIGN:	**Seismic Design Category:**	**SDC =**	**D**
	Basic Structural System		**Bearing Wall**
	Seismic Force Resisting System		**Special CMU Shear Walls**
	Response Modification Factor:	**R =**	**5**
	System Over strength Factor	**Omega =**	**2.5**
	Deflection Amplification Factor	**Cd =**	**3.5**
	Site Classification per IBC 1613.3.2 & ASCE 7-10, Ch. 20 **Site Class =**		**D**
	Seismic Importance Factor per ASCE 7-10 Table 1.5-2	**Ie =**	**1.25**
	Spectral Response Acceleration (Short Period)	S_s **=**	**1.736**
	Spectral Response Acceleration (1-Second Period)	S_1 **=**	**0.764**
	Spectral Design Response Coefficient (Short Period)	S_{DS} **=**	**1.16 g**
	Spectral Design Response Coefficient (1-Second Period)	S_{D1} **=**	**0.76 g**
	Seismic response coefficient(s)	**Cs =**	**0.289**
	Redundancy Factor (North/South Direction)	**N/S rho=**	**1.3**
	Redundancy Factor (East / West Direction)	**E/W rho=**	**1.0**
	Design Base Shear (North/South Direction) (KIPS)		**410**
	Design Base Shear (East / West Direction) (KIPS)		**315**
	Base shear governed by:		**seismic**
	Seismic Analysis procedure used:		**Equivalent Lateral Force (ELF)**

SNOW LOAD: (1)	Flat Roof Snow Load, (PSF)	p_f =	**20** (2)
	Snow Drift Loading required by Authority Having Jurisdiction?		**Yes**
	Snow Load Importance Factor	I_s =	**1.1** (3)
	Ground Snow Load, (PSF)	p_g =	**20**
	Snow Exposure Factor	C_e =	**B**
	Thermal Factor	C_t =	**1.0**
	See Roof Plan for Drift Loading		

1) Snow Load is un-reducible.
2) Snow Load based on Snow Load Analysis for Oregon, 3rd Edition, December 2007.
3) Snow Load Importance Factor per ASCE 7-10 Table 1.5-2.

DESIGN LIVE LOADS	AREA	LIVE LOADS (PSF) UNO	REMARKS & FOOTNOTES
	Gymnasium	100	Including interior balconies
	Mechanical Rooms	150	
	Light Storage Area	125	
	Roofs	20 PSF or 300 LB	
	Roof – Point Loads to Joist and Girder Members **open to floor below** in Occupancy Classes A, B, E, I, M, R and U	500 lbs	At any Panel Point of Truss-type members or at Any Point along primary structural members

DESIGN DEAD LOADS	BIDDER DESIGN	DEAD LOADS (PSF) UNO	REMARKS & FOOTNOTES
	Roof Dead Load, Total Top Chord Bottom Chord	20 PSF 15 PSF 5 PSF	For Open Web Steel Joist design
	OWSJ Additional Load	500 LBS Point load	to be applied at any panel point on the top or bottom chord of each joist (wherever it produces the highest stress)

SUBMITTALS

SUBMIT FOR REVIEW: SUBMITTALS of shop drawings, and product data are required for items noted in the individual materials sections and for *bidder designed* elements.

SUBMITTAL REVIEW PERIOD: Submittals shall be made in time to provide a minimum of TWO WEEKS or 10 WORKING DAYS for review by the Architect/Engineer prior to the onset of fabrication.

GENERAL CONTRACTOR'S PRIOR REVIEW: Prior to submission to the Architect/Engineer, the Contractor shall review the submittal for completeness. Dimensions and quantities are not reviewed by the SER, and therefore, must be verified by the General Contractor. Contractor shall provide any necessary dimensional details requested by the Detailer and provide the Contractor's review stamp and signature before forwarding to the Architect/Engineer.

SHOP DRAWING REVIEW: Once the contractor has completed his review, the SER will review the submittal for general conformance with the design concept and the contract documents of the building and will stamp the submittal accordingly. Markings or comments shall not be construed as relieving the contractor from compliance with the project plans and specifications, nor departures there from. The SER will return submittals in the form they are submitted in (either hard copy or electronic). For hard copy submittals, the contractor is responsible for submitting the required number of copies to the SER for review.

SHOP DRAWING DEVIATIONS: When shop drawings (component design drawings) differ from or add to the requirements of the structural drawings they shall be designed and stamped by the responsible SSE.

DEFERRED SUBMITTALS

BIDDER-DESIGNED ELEMENTS
Submit "Bidder-Designed" deferred submittals to the Architect and SER for review. The deferred submittals shall also be submitted to the city for approval, if required by the city.

Design of prefabricated, "bidder designed", manufactured, pre-engineered, or other fabricated products shall be comply with the following requirements:
1) Design considers tributary dead, live, wind and earthquake loads in combinations required by IBC.
2) Design within the Deflection Limits noted herein and as specified or referenced in the IBC.
3) Design shall conform to the specifications and reference standards of the governing code.
4) Submittal shall include:
   a. Calculations prepared, stamped and signed by the SSE demonstrating code conformance.
   b. Engineered component design drawings are prepared, stamped and signed by the SSE.
   c. Product data, technical information and manufacturer's written requirements and Agency approvals as applicable.
   d. SSE may submit to the Architect/Engineer, a request to utilize relevant alternate design criteria of similar nature and generally equivalency which is recognized by the Code and acceptable to the Authority Having Jurisdiction. Submit adequate documentation of design.

DEFLECTION LIMITS FOR SSE / BIDDER DESIGNED ELEMENTS:	VERTICAL	LIMIT
	Roof Members, Dead + Live or Snow or Wind, Total Load (TL) Deflection	L / 240, where (L is span length,inches)
	Roof, Live or Snow or Wind Load (RLL)	L / 360
	HORIZONTAL	**LIMIT and FOOTNOTE**
	Members Supporting Brittle Finishes	L / 240 (1)
	Members Supporting Flexible Finishes	L / 180 (1)

(1) Wind Load is reducible to 0.42 times the Component and Cladding Loads per Table 1604.3 footnote f.

GENERAL CONTRACTOR'S PRIOR REVIEW: Once the contractor has completed his review of the SSE component drawings, the SER will review the submittal for general conformance with the design of the building and will stamp the submittal accordingly. Review of the Specialty Structural Engineer's (SSE) shop drawings (component design drawings) is for compliance with design criteria and compatibility with the design of the primary structure and does not relieve the SSE of responsibility for that design. All necessary bracing, ties, anchorage, proprietary products shall be furnished and installed per manufacturer's instructions or the SSE's design drawings and calculations. These elements include but are not limited to:

- Open Web Steel Joists and Girders
- Handrails and Guardrails Anchorage
- Mechanical, Electrical, Plumbing & Sprinkler Hanger Plans
- Underpinning of existing adjacent building foundations
- Fountain or pool structures / equipment vaults

INSPECTIONS, QUALITY ASSURANCE VERIFICATIONS AND TEST REQUIREMENTS

INSPECTIONS: Foundations, footings, under slab systems and framing are subject to inspection by the Building Official in accordance with IBC 110.3. Contractor shall coordinate all required inspections with the Building Official.

SPECIAL INSPECTIONS, VERIFICATIONS and TESTS: Special Inspections, Verifications and Testing shall be done in accordance with IBC Chapter 17 and the STATEMENT OF SPECIAL INSPECTIONS herein per IBC Sections 1704 and 1705, including 1705.11 and 1705.12 for seismic resistance for projects in Seismic Design Categories C, D, E and F and including 1705.10 for high wind regions as applicable.

SPECIAL INSPECTION AGENCY and SPECIAL INSPECTORS: Owner shall retain an "approved agency" per IBC 1703 to provide Special Inspections for the project. Special Inspectors shall be qualified persons per IBC 1704.2.1.

STATEMENT OF SPECIAL INSPECTIONS. Special Inspections and Testing per IBC Sections 1704 and 1705 are required for the following:

FABRICATION SHOP INSPECTION: Where off-site Fabrication of gravity LOAD BEARING MEMBERS & ASSEMBLIES is performed, Special Inspector shall verify that the fabricator complies with IBC 1704.2.5 which includes the following:

- **Prior to the start of fabrication**, Special Inspector(s), representing the Owner, shall visit the Fabricator's shop(s) where the work is to be performed, and verifies that the Fabricator maintains detailed Fabrication and Quality Control procedures that provide a basis for inspection, control of workmanship, material control and fabricator's ability to conform to approved Construction Documents and referenced Standards.
- **Fabricator shall have available** for Inspector's review, detailed procedures for material control that demonstrates the fabricator's ability to maintain suitable records and procedures such that, at any time during the fabrication process, the material specification, grade and applicable test reports for primary load-carrying members, are capable of being determined.

SOILS & FOUNDATION CONSTRUCTION per IBC Section 1705.6

- **Periodic** inspection of soils earthwork per Table 1705.6 is required for:
  - Footing soil bearing surfaces prior to placing any reinforcing steel
  - Excavation depth and bearing layer prior to placing any reinforcing steel.
  - Compacted fill material classification.
  - Subgrade preparation prior to filling.
- **Continuous** inspection per Table(s) 1705.6 required for:
  - Filling operations to satisfy requirements of IBC Table 1705.6 and the geotechnical report listed under SOILS & FOUNDATIONS section.
  - Compacted fill density testing of each lift, proper lift thickness and material classification.

CONCRETE CONSTRUCTION per IBC Section 1705.3 and Table 1705.3 including:

- **Periodic** inspection required for:
  - Size & placement of all reinforcing steel prior to the pour.
  - Placement clearances around reinforcing steel at embedded conduit.
  - Placing & size of cast-in-place bolts and embedded fabrications prior to the pour.
  - Shape, location & dimensions of members formed.
  - Use of the required design concrete mix.
  - Maintenance of specified curing temperature and techniques.
  - Verification of in-situ concrete strength prior to removal of shores and forms from beams and structural slabs.
- **Continuous** inspection required during the:
  - Placing of reinforced concrete for proper application techniques.
  - Placing of concrete around cast-in-place bolts and embeds.
  - Sampling of fresh concrete.
  - Determinations of slump, air content and temperature.
  - Grouting operation of post-installed bolts or rebar dowels.

STRUCTURAL MASONRY per IBC Section 1705.4 and 1705.12

LEVEL B - MASONRY CONSTRUCTION per TMS 402-11/ACI 530-11/ASCE 6-11 Section 1.19.2:

- **Periodic** inspection required for:
  - Size, grade, placement and type of reinforcing steel and connectors
  - Proportions of site-prepared mortar
  - Construction of mortar joints
  - Cleanliness of grout space prior to grouting
  - Cleanout size and spacing if cleanouts are required for high-lift grouting
  - Size and location of structural elements
  - Type, size, and location of anchors, including other details of anchorage of masonry to structural members, frames, or other construction
  - Protection of masonry during cold weather (temp. below 40 degrees F)
  - Protection of masonry during hot weather (temp. above 90 degrees F).
  - Compliance with required inspection provisions of the construction documents and the approved submittals.
- **Continuous** inspection required during/for the:
  - Continuous inspection of welding of reinforcing bars.

STRUCTURAL STEEL per IBC 1704.2.5.1

A qualified Special Inspector of an "approved agency" providing Quality Assurance (QA) Special Inspections for the project shall review and confirm the Fabricator and Erector's Quality Control (QC) procedures for completeness and adequacy relative to AISC 360-10 Chapter N, the AISC 303 Code of Standard Practice, AWS D1.1-2010 Structural Welding Code, and 2012 IBC code requirements for the fabricator's scope of work.

- QA Agency providing Special Inspections shall provide personnel meeting the minimum qualification requirements for Inspection and Nondestructive Testing NDT per AISC 360-10 Section N4.
- Verify Fabricator and Erector Quality Control Program per AISC 360-10 Section N2.
- Visual Welding Inspection of welds by both QC and QA personnel shall be per tables listed in AISC 360 Section N5.
- Inspection Tasks for Welding
  - Prior to Welding per AISC 360-10 Table N5.4-1.
  - During Welding per AISC 360-10 Table N5.4-2.
  - After Welding per AISC 360-10 Table N5.4-3.
- Nondestructive Testing (NDT) of welds:
  - Non-Destructive Testing (NDT) of welded joints per AISC 360-10 N.5.
  - Risk Category for determination of extent of NDT per AISC 360 N5.5b is noted in the Design Criteria and Loads section of these General Requirements.
  - NDT performed shall be documented and reports shall identify the tested weld by piece mark and location in the piece.
  - For field work, the NDT report shall identify the tested weld by location in the structure, piece mark and location in the piece.
- Inspection Tasks for Bolting per AISC 360-10 Section N5.6
  - Prior to Bolting per AISC 360-10 Table N5.6-1. Not required for snug-tight joints.
  - During Bolting per AISC 360-10 Table N5.6-2. Not required for snug-tight joints.
  - After Bolting per AISC 360-10 Table N5.6-3.
- Additional Inspection tasks per AISC 360-10 Section N5.7.
- Inspection for Composite Construction shall be done per AISC 360-10 Section N6.

COLD-FORMED STEEL per OSSC Section 1705 shall be done in accordance with the following requirements:

- **Periodic** inspection required for Verification during/of:
  - Periodic spot check inspections (**minimum of 30 percent**) for the following:
    - Member material, size, and coating.
    - Alignment, placement, condition of members shall meet the requirements of the "Erection and Tolerances" section below.
    - Wall stud bridging and strongback installation.
    - Connections: screw & bolt size and spacing, welding operations and size
- Where off-site prefabrication of assemblies occurs, Special Inspector shall review the Fabrication shop's Quality Control procedures for completeness and adequacy relative to AISI Code of Standard Practice, AWS D1.3 Structural Welding Code – Sheet Steel and 2014 OSSC 1704.2.5 code requirements for the fabricator's scope of work.

POST-INSTALLED ANCHORS TO CONCRETE AND MASONRY: shall comply with IBC Section 1703. Inspections shall be in accordance with the requirements set forth in the approved ICC Evaluation Report and as indicated by the design requirements specified on the drawings. Refer to the POST INSTALLED ANCHORS section of these notes for anchors that are the basis of the design. Special inspector shall verify anchors are as specified in the POST INSTALLED ANCHORS section of these notes or as otherwise specified on the drawings. Substitutions require approval by the SER and require substantiating calculations and current 2012 IBC recognized ICC Evaluation Services (ES) Report. Special Inspector shall document in their Special Inspection Report compliance with each of the elements required within the applicable ICC Evaluation Services (ES) Report.

INSPECTION SUBMITTALS: Special inspection reports shall be provided on a weekly basis. Final special inspection reports will be required by each special inspection firm per IBC 1704.2.4. Submit copies of all inspection reports to the Architect/Engineer and the Authority Having Jurisdiction for review.

STRUCTURAL OBSERVATION: Structural Observation shall be provided for structures classified as Seismic Design Category D, E and F or for structures sited where nominal (allowable) wind speed V_{ASD} exceeds 110 mph in accordance with IBC Section 1704.5 and Section 107.3.4. Structural observation site visits will be as follows: **during foundation installation, during CMU shear wall construction, during roof framing, and after roof diaphragm is complete prior to roofing.** Contractor shall notify the SER in a timely manner to allow scheduled Observations to occur. Field (Observation) Reports will be distributed to the Architect, the Contractor, Special Inspector and the Authority Having Jurisdiction.

CONTRACTOR RESPONSIBILITY: Prior to issuance of the building permit, the Contractor is required to provide the Authority Having Jurisdiction a signed, written acknowledgement of the Contractor's responsibilities associated with the above Statement of Special Inspections addressing the requirements listed in IBC Section 1704.4. Contractor is referred to IBC Sections 1705.11.5 and 1705.11.6 for architectural and MEP building systems that may be subject to additional inspections (based on the building's designated Seismic Design Category listed in the CRITERIA), including anchorage of HVAC ductwork containing hazardous materials, piping systems and mechanical units containing flammable, combustible or highly toxic materials, electrical equipment used for emergency or standby power, exterior wall panels and suspended ceiling systems.

PREFABRICATED CONSTRUCTION: All prefabricated construction shall conform to IBC Section 1703.

SOILS AND FOUNDATIONS

REFERENCE STANDARDS: Conform to IBC Chapter 18 "Soils and Foundations."

GEOTECHNICAL REPORT: Recommendations contained in Newport Aquatic Center Geotechnical Investigation and Seismic Hazard Study (Project 2141050) by Foundation Engineering, Inc. dated August 13, 2014 were used for design.

CONTRACTOR'S RESPONSIBILITIES: Contractor shall be responsible to review the Geotechnical Report and shall follow the recommendations specified therein including, but not limited to, subgrade preparations, pile installation procedures, ground water management and steep slope Best Management Practices."

GEOTECHNICAL SUBGRADE INSPECTION: The Geotechnical Engineer shall inspect all sub-grades and prepared soil bearing surfaces, prior to placement of foundation reinforcing steel and concrete. Geotechnical Engineers shall provide a letter to the owner stating that soils are adequate to support the "Allowable Foundation Bearing Pressure(s)" shown below.

DESIGN SOIL VALUES:

Safety Factor per Soils Report	1.5	
Allowable Foundation Bearing Pressure	3000	PSF – Structural Fill
Passive Lateral Pressure (ultimate)	375	PSF/FT
Passive Lateral Pressure (allowable)	125	PSF/FT
Coefficient of Sliding Friction	0.5	

FOUNDATIONS and FOOTINGS: Foundations shall bear on either on competent native soil or compacted structural fill as per the geotechnical report. Exterior perimeter footings shall bear not less than **12** inches below finish grade, unless otherwise specified by the geotechnical engineer and/or the building official.

FOOTING DEPTH: Tops of footings shall be as shown on plans with vertical changes as indicated with steps in the footings; locations of steps shown as approximate and shall be coordinated with the civil grading plans to ensure that the exterior perimeter footings bear no less than 12 inches below finish grade, or as otherwise indicated by the geotechnical engineer or building official.

SLABS-ON-GRADE: All slabs-on-grade shall bear on compacted structural fill or competent native soil per the geotechnical report. All moisture sensitive slabs-on-grade or those subject to receive moisture sensitive coatings/covering shall be provided with an appropriate capillary break and vapor barrier/retardant over the subgrade prepared and installed as noted in the geotechnical report, barrier manufacturer's written recommendations and coordinated with the finishes specified by the Architect.

CAST-IN-PLACE CONCRETE

REFERENCE STANDARDS: Conform to:
(1) ACI 301-10 "Specifications for Structural Concrete"
(2) IBC Chapter 19 "Concrete"
(3) ACI 318-11/318R-11 "Building Code Requirements for Structural Concrete"
(4) ACI 117-10 "Specifications for Tolerances for Concrete Construction and Materials"

FIELD REFERENCE: The contractor shall keep a copy of ACI Field Reference manual, SP-15, "Standard Specifications for Structural Concrete (ACI 301) with Selected ACI and ASTM References."

CONCRETE MIXTURES: Conform to ACI 301 Section 4 "Concrete Mixtures" and IBC Section 1904.2.

MATERIALS: Conform to ACI 301 Section 4.2.1 "Materials" for requirements for cementitious materials, aggregates, mixing water and admixtures.

SUBMITTALS: Provide all submittals required by ACI 301 Section 4.1.2. Submit mix designs for each mix in the table below. Substantiating strength results from past tests shall not be older than 24 months per ACI 318 Section 5.3.

TABLE OF MIX DESIGN REQUIREMENTS

Member Type/Location	Strength f'c (psi)	Test Age (days)	Maximum Aggregate	Exposure Class	Max W/C Ratio	Air Content	Notes (1 to 8 Typical UNO)
Footings	4000	28	1"	-	-	-	-
Interior Slabs on Grade	3000	28	1"	-	0.5	-	-
Mild Reinforced Beams & Slabs	5000	28	1"	-	0.45	-	9
Interior Topping Slabs	3000	28	1"	-	0.45	-	-
Building Walls	4000	28	1"	-	-	-	-
Basement Walls	4000	28	1"	-	0.45	5%	-
Site Retaining Walls	4000	28	1"	-	0.45	5%	-
Stem Walls & Curbs	4000	28	1"	-	-	-	-
Exterior Stem Walls & Curbs	4000	28	1"	-	0.45	5%	-

Table of Mix Design Requirements Notes:

(1) W/C Ratio: Water–cementitious material ratios shall be based on the total weight of cementitious materials. Maximum ratios are controlled by strength noted in the Table of Mix Design Requirements and durability requirements given in ACI 318 Section 4.3.

(2) Cementitious Materials:
   a. The use of fly ash, other pozzolans, silica fume, or slag shall conform to ACI 318 Sections 4.3.1 and 4.4.2. Maximum amount of fly ash shall be 25% of total cementitious content unless reviewed and approved otherwise by SER.
   b. For concrete used in elevated floors, minimum cementitious-materials content shall conform to ACI 301 Table 4.2.2.1. Acceptance of lower cement content is contingent on providing supporting data to the SER for review and acceptance.
   c. Cementitious materials shall conform to the relevant ASTM standards listed in ACI 318 Section 3.2.1.

(3) Air Content: Conform to ACI 318 Section 4.4.1. Minimum standards for exposure class are noted in the table. If freezing and thawing class is not noted, air content given is that required by the SER. Tolerance is ±1-½%. Air content shall be measured at point of placement.

(4) Aggregates shall conform to ASTM C33.

(5) Slump: Conform to ACI 301 Section 4.2.2.2. Slump shall be determined at point of placement.

(6) Chloride Content: Conform to ACI 318 Section 4.3.1.

(7) Non- chloride accelerator: Non-chloride accelerating admixture may be used in concrete placed at ambient temperatures below 50°F at the contractor's option.

(8) ACI 318, Section 4.2.1 exposure classes shall be assumed to be F0, S0, P0, and C0 unless different exposure classes are listed in the Table of Mix Design Requirements that modify these base requirements.

(9) Shrinkage Limit: Concrete used in elevated slabs and beams shall have a shrinkage limit of 0.045% at 28 days measured in accordance with ASTM C157. Submit laboratory test results to SER for approval prior to construction.

FORMWORK & RESHORING: Conform to ACI 301 Section 2 "Formwork and Form Accessories." Removal of Forms shall conform to Section 2.3.2 except strength indicated in Section 2.3.2.5 shall be 0.75 f' c. Reshoring shall conform to Section 2.3.3. In addition, mild reinforced (non post-tensioned) slabs shall be continuously reshored for a minimum of 14 days following placement of concrete or 7 days after concrete has reached 0.75 fc, whichever is longer.

MEASURING, MIXING, AND DELIVERY: Conform to ACI 301 Section 4.3.

HANDLING, PLACING, CONSTRUCTING AND CURING: Conform to ACI 301 Section 5. In addition, hot weather concreting shall conform to ACI 305.1-06 and cold weather concreting shall conform to ACI 306.1-90.

CONSTRUCTION JOINTS: Conform to ACI 301 Sections. 2.2.2.5, 5.2.2.1 and 5.3.2.6. Construction joints shall be located and detailed as on the construction drawings. Submit alternate locations per ACI 301 Section 5.1.2.3a for review and approval by the SER two weeks minimum prior to forming. Use of an acceptable adhesive, surface retardant, portland cement grout or roughening the surface is not required unless specifically noted on the drawings.

EMBEDDED ITEMS: Position and secure in place expansion joint material, anchors and other structural and non-structural embedded items before placing concrete. Contractor shall refer to mechanical, electrical, plumbing and architectural drawings and coordinate other embedded items.

GROUT: Use 7000 psi non-shrink grout under column base plates.

GROUTED REBAR: See Post-Installed Anchors to Concrete.

POST-INSTALLED ANCHORS to CONCRETE: Anchor location, type, diameter and embedment shall be as indicated on drawings. Reference the POST INSTALLED ANCHORS section for applicable Post-Installed Anchor Adhesives. Anchors shall be installed and inspected in strict accordance with the applicable ICC-Evaluation Service Report (ESR). Special inspection shall be per the TESTS and INSPECTIONS section.

TOPPING SLABS: Conform to ACI 301 and the recommendations of ACI 302.1R-04'Guide For Concrete Floor and Slab Construction" for Class 3 (bonded topping floors. Caution: Bonding of two-course floors is a highly critical operation requiring extra care by the contractor. Strict compliance with the concrete mix requirements, especially the water-cement ratio and slump is critical. When a bonding agent is specified, conform strictly to the manufacturer's instructions for use and for all special surface preparations required.

SHRINKAGE: Conventional and post-tensioned concrete slabs will continue to shrink after initial placement and stressing of concrete. Contractor and subcontractor shall coordinate jointing and interior material finishes to provide adequate tolerance for expected structural frame shrinkage and shall include, but not be limited to: curtain wall, dryvit, storefront, skylight, floor finish, and ceiling suppliers. Contact Engineer for expected range of shrinkage.

STRENGTH TESTING AND ACCEPTANCE:

Testing: Obtain samples and conduct tests in accordance with ACI 301 Section 1.6.3.2. Additional samples may be required to obtain concrete strengths at alternate intervals than shown below.

- Cure 4 cylinders for 28-day test age. Test 1 cylinder at 7 days, test 2 cylinders at 28 days, and hold 1 cylinder in reserve for use as the Engineer directs. After 56 days, unless notified by the Engineer to the contrary, the reserve cylinder may be discarded without being tested for specimens meeting 28-day strength requirements.
- The number of cylinders indicated above reference 6 by 12 in cylinders. If 4 by 8 in cylinders are to be used, additional cylinders must be cured for testing of 3 cylinders at test age per the table of mix design requirements.

Acceptance. Strength is satisfactory when:

(1) The averages of all sets of 3 consecutive tests equal or exceed the specified strength.

(2) No individual test falls below the specified strength by more than 500 psi.

A "test" for acceptance is the average strength of two 6 by 12 in. cylinders or three 4 by 8 in. cylinders tested at the specified test age.

CONCRETE PLACEMENT TOLERANCE: Conform to ACI 117-10 for concrete placement tolerance.

FLOOR FLATNESS and FLOOR LEVELNESS: All concrete slabs (including slabs on grade) shall have a minimum Floor Flatness (FF) of 20 as measured in accordance with ACI 117. Concrete slabs that will receive wood flooring shall have a minimum FF of 35. All concrete slabs on grade shall have a minimum Floor Levelness of 20 as measured in accordance with ACI 117.

CONCRETE REINFORCEMENT

REFERENCE STANDARDS: Conform to:
(1) ACI 301-10 "Standard Specifications for Structural Concrete", Section 3 "Reinforcement and Reinforcement Supports."
(2) ACI SP-66-04 "ACI Detailing Manual" including ACI 315-99 "Details and Detailing of Concrete Reinforcement."
(3) CRSI MSP-09, 28th Edition, "Manual of Standard Practice."
(4) ANSI/AWS D1.4 "Structural Welding Code - Reinforcing Steel."
(5) IBC Chapter 19-Concrete.
(6) ACI 318-11 "Building Code Requirements for Structural Concrete."
(7) ACI 117-10 "Specifications for Tolerances for Concrete Construction and Materials"

SUBMITTALS: Conform to ACI 301 Section 3.1.1 "Submittals, data and drawings." Submit placing drawings showing fabrication dimensions and locations for placement of reinforcement and reinforcement supports.

MATERIALS:

Reinforcing Bars	ASTM A615, Grade 60, deformed bars.
Weldable Reinforcing Bars	ASTM A706, Grade 60, deformed bars.
Smooth Welded Wire Fabric	ASTM A185
Deformed Welded Wire Fabric	ASTM A497
Bar Supports	CRSI MSP-09, Chapter 3 "Bar Supports."
Tie Wire	16 gage or heavier, black annealed.
Headed Deformed Bars	ASTM A970

EARTHQUAKE REQUIREMENTS: Longitudinal Bars in shear walls and coupling beams of shear walls shall conform to ASTM A706, grade 60 or shall conform to the following requirements:
(1) Welding: Welding is not permitted except as specified in the drawings. Weld in accordance with AWS D1.4.
(2) Mill Tests: Submit mill certificates indicating physical and chemical properties.
(3) Yield Strength: Actual yield strength, based on mill tests, does not exceed the specified yield strength by more than 18,000 psi. (Retests shall not exceed this value by more than an additional 3000 psi.)
(4) Ultimate Strength: The ratio of the actual tensile strength to the actual yield strength is not less than 1.25.

FABRICATION: Conform to ACI 301, Section 3.2.2. "Fabrication", and ACI SP-66 "ACI Detailing Manual."

STRUCTURAL DESIGN PROFESSIONAL IN RESPresponsible charge
SHIRLEY CHU
OREGON
EXPIRES: 12-31-15

Robertson | Sherwood Architects pc
132 East Broadway, Suite 540
Eugene, Oregon 97401
P 541 | 342.8077
F 541 | 345.4302
www.robertsonsherwood.com
225 SE Avery Street
Newport, OR 97365

DCI ENGINEERS
403 SW 6TH AVENUE • SUITE 805
PORTLAND, OREGON 97204
PHONE: (503) 242-0448 • FAX: (503) 242-2449
WEBSITE: www.dciengineers.com
E-MAIL: info@dciengineers.com

Newport Aquatics Center

ADDENDUM 3 7-22-2015

STRUCTURAL GENERAL NOTES

Drawn By	IK
Checked	SC
Date	17 JUNE 2015
DCI Project #	14091-0028

S1.1

14091-0028 S11.dwg 22-Jul-15 12:59 PM sashih

WELDING: Bars shall not be welded unless authorized. When authorized, conform to ACI 301, Section 3.2.2.2. "Welding", AWS D1.4, and provide ASTM A706, grade 60 reinforcement.

PLACING: Conform to ACI 301, Section 3.3.2 "Placement." Placing tolerances shall conform to ACI 117.

CONCRETE COVER: Conform to the following cover requirements unless noted otherwise in the drawings.

Concrete cast against earth................................ 3"
Concrete exposed to earth or weather .... 2"
Ties in columns and beams .... 1-½"
Bars in slabs .... ¾"
Bars in walls .... ¾"

SPLICES: Conform to ACI 301, Section 3.3.2.7, "Splices". Refer to "Typical Lap Splice and Development Length Schedule" for typical reinforcement splices. Splices indicated on individual sheets shall control over the schedule. Mechanical connections may be used when approved by the SER. For reinforcing within the lateral system (shear walls) and reinforcing connecting the diaphragm slab to the lateral system, mechanical splice strength is increased to develop 100 percent of the specified tensile strength of the splices bar.

FIELD BENDING: Conform to ACI 301 Section 3.3.2.8. "Field Bending or Straightening." Bar sizes #3 through #5 may be field bent cold the first time. Other bars require preheating. Do not twist bars. Bars shall not be bent past 45 degrees.

TYPICAL CONCRETE REINFORCEMENT: Unless noted on the plans, concrete walls shall have the following minimum reinforcement. Contractor shall confirm minimum reinforcement of walls with SER prior to rebar fabrication.

TABLE of MINIMUM CONCRETE WALL REINFORCING

Wall Thickness	HORIZONTAL Bars	VERTICAL Bars	Location
6"	#4 @ 12" OC	#4 @ 12" OC	center in wall
8"	#5 @ 12" OC	#5 @ 12" OC	center in wall
10"	#4 @ 16" OC EF	#4 @ 16" OC EF	EF = each face
12"	#4 @ 12" OC EF	#4 @ 12" OC EF	EF = each face

REINFORCED UNIT MASONRY

REFERENCE STANDARDS: Conform to:

1) IBC Chapter 21 "Masonry."
2) ACI 530-11/ASCE 5-11/TMS 402-11 "Building Code Requirements for Masonry Structures." Herein referenced as MSJC.
3) ACI 530.1-11/ASCE 6-11/TMS 602-11 "Specification for Masonry Structures." Herein referenced as MSJC.1.
4) ACI SP-66 "ACI Detailing Manual" including ACI 315 "Details and Detailing of Concrete Reinforcement."
5) ANSI/AWS D1.4 "Structural Welding Code - Reinforcing Steel."

SUBMITTALS: Conform to MSJC.1 Section 1.2. Submit shop drawings for review including:

1) Masonry reinforcement, size, layout, and grade in accordance with plans.
2) Material certificates for all Steel Reinforcing, Anchors, Ties and Metal Accessories certifying compliance with required strength, grade and ASTM standards.
3) Certification letters for masonry block and grout mix design certifying compliance with required strength and respective ASTM standards.
4) Mix Designs for each Grout Mix indicating type and proportions of ingredients in compliance of Proportion Specification.
5) Location of expansion and control joints.
6) Product Information, ICC ESR Reports and Material Certifications certifying compliance for all non-pre-approved Post-Installed Anchors.
7) Hot and/or Cold weather construction procedures.
8) High Grout Lift procedures.

STRENGTH: The assumed compressive strength of the masonry assemblage, f'm, is 1500 psi based on IBC Section 2105.2.2.1.2 for concrete masonry and 2000 psi based on IBC Section 2105.2.2.1.1 for clay masonry.

MATERIALS:

1) Concrete Masonry Units: Conform to ASTM C 90, Type-I (moisture controlled), medium weight (approx. 115 PCF) units. Provide 1900 psi compressive strength to achieve masonry assembly strength indicated above under STRENGTH.

2) Mortar: Conform to ASTM C270, Type S, and IBC Section 2103.9 "Mortar."

3) Grout: Conform to ASTM C476 and IBC Section 2103.13 Proportion Specifications. Use fine grout except coarse grout may be used where permitted by MSJC Table 1.19.1.

4) Reinforcing Bars: Conform to ASTM A615, Grade 60 deformed bars and IBC Section 2103.14 unless noted otherwise. Lap Splices shall be as noted on plans. Fabrication shall be in accordance with MSJC.1 Section 2.7.

5) Joint Reinforcement: Conform to ASTM A951 and IBC Section 2103.14.

6) Anchors, Ties and Accessories: Conform to IBC Section 2103.14 and MSJC.1 Section 2.4D.

7) Water: Shall be clean and potable.

8) Admixtures: Admixtures shall not be used unless approved by SER.

9) Post-Installed Anchors in MASONRY: Reference the POST- INSTALLED ANCHORS section for applicable Post-Installed Anchors to Masonry.

10) Second-Hand Units: Shall not be used unless approved by SER.

QUALITY ASSURANCE(f'm=1500 psi): Conform to IBC Section 2105 "Quality Assurance".

1) Masonry Units: A letter of certification from the manufacturer of the units shall be provided to the SER prior to the delivery of the units to the jobsite to ensure the units comply with the compressive strength specified above and ASTM C 90.

2) Mortar: No mortar testing is required.

3) Grout: A letter of certification from the supplier of the grout shall be provided to the SER prior to delivery of the grout to the jobsite to ensure that the grout complies with ASTM C 476.

DELIVERY, STORAGE AND HANDLING: Delivery, storage and handling of materials used for masonry construction shall be per MSJC.1, Section 1.7.

SPECIAL INSPECTION: Special Inspections shall be performed per the "TESTS AND INSPECTIONS" section of the STRUCTURAL GENERAL NOTES.

ANCHORS, TIES AND CONNECTORS: Masonry anchors, ties and connectors shall be as specified on structural drawings. Consult architectural drawings for masonry anchor ties not included on the structural drawings.

EMBEDDED ITEMS: Embedded Items and Accessories shall be in accordance with MSJC Section 1.15 and installed in accordance with MSJC.1 Section 3.3D. Position and Secure in place expansion joint material, anchors and other structural and non-structural embedded items before placing grout. Contractor shall refer to structural, architectural, mechanical, electrical, plumbing, etc. and coordinate all embedded items.

POST-INSTALLED ANCHORS to MASONRY: Anchor location, type, diameter and embedment shall be as indicated on drawings. Reference the POST INSTALLED ANCHORS section for applicable Post-Installed Anchor Adhesives. Anchors shall be installed and inspected in strict accordance with the applicable ICC-Evaluation Service Report (ESR). Special inspection shall be per the TESTS and INSPECTIONS section.

MASONRY REINFORCING STEEL: Masonry reinforcing shall be as noted on plans and shall be securely placed in accordance with IBC Sections 2104.1.1, 2106, 2107, and 2108 and MSJC Section 1.16. Unless otherwise noted on the plans, the minimum wall reinforcement shall be as follows:

TABLE of MINIMUM REINFORCING

Wall Thickness	Vertical Bars	Running Bond Horizontal Bars	Stack Bond Horizontal Bars
6"	#5 @ 24" OC	#5 @ 32" OC	#6 @ 40"OC
8"	#5 @ 24" OC	(2) #4 @ 48" OC	(2) #5 @ 48"OC
12"	#6 @ 32" OC	(2) #5 @ 48"OC	(2) #6 @ 48"OC

Bond beams with horizontal bar or bars shall be provided at 48 inches on center and at all floor and roof lines and at the top of the wall. Provide a bond beam with horizontal bar or bars over all openings, and extend these bars 2'-0" past the opening at each side. Provide a bar or bars vertically for the full height of the wall at each side of openings, wall ends and intersections. Dowels to masonry walls shall be embedded a minimum of 1'-6" or hooked into the supporting structure and be of the same size and spacing as wall reinforcing. Reinforcing steel shall be as specified under "MATERIALS" Section. Provide corner bars to match the horizontal wall reinforcing at wall intersections. All bars shall be lapped a minimum 48 diameters or 1'-6" minimum unless noted on the plans.

LINTELS: Reinforced masonry lintels to be installed over all openings unless otherwise indicated on drawings. Do not splice reinforcing bars within lintels and maintain 8 inch bearing minimum on each side. Unless otherwise noted on the plans, the minimum reinforcement for lintels in 8" masonry shall be as follows:

(1) Openings up to 42 inches wide: (2) #4 at bottom web of 8 inch deep lintel.
(2) Openings 42 to 78 inches wide: (2) #4 at bottom web of 16 inch deep lintel.
(3) Openings over 78 inches wide: Reinforce per drawings

CONSTRUCTION: Masonry shall be constructed in accordance with IBC Section 2104 "Construction", and MSJC.1 Part 3 "Execution."

COLD AND HOT WEATHER CONSTRUCTION: Cold and hot weather construction shall be in accordance with IBC Section 2104.3 and 2104.4.

BLOCK PATTERN: Use running bond unless noted. For stack bond, follow criteria in MSJC Section 1.11.

GROUTED CELLS: Fill all cells with grout unless noted otherwise on plans. Minimum grouting spaces and construction shall be in accordance with MSJC Section 1.16 and MSJC.1 Section3.5.

GROUT POUR HEIGHT: Grout Pour Height shall not exceed height specified in MSJC.1 Section 3.5C.

- Masonry blocks shall be adequately braced to withstand fluid pressures of Grout Pour, see temporary bracing.

GROUT LIFTS: Unless otherwise noted, Grout Lifts and pour height shall not exceed 5ft 4in. Grout Lifts shall not exceed spacing of intermediate reinforced bond beams. Grout Lifts exceeding 5ft 4in shall be approved by SER.

REINFORCING COVER AND CLEARANCE REQUIREMENTS: Unless otherwise noted:

Clear distance between parallel bars (and between adjacent pairs of lap spliced bars) shall be equal to the bar adjacent bar diameter (for bars greater than #8), and not less than:
1) 1" at 8" and smaller block,
2) 2" at 10" block
3) 3" at 12" block.

Clearance (clear space) between the block and the reinforcing shall be:
1) ¼" at fine grout
2) ½" at course grout.

Masonry Cover (including grout and block wall) at masonry face exposed to earth or weather shall be:
1) 1 1/2" minimum
2) 2" for bars #6 and larger.

CONTROL AND EXPANSION JOINTS: Reference Drawings for typical details of Masonry Control and Expansion Joints. Location of control and expansion joints shall be approved by SER. Unless otherwise indicated on drawings, install control and expansion joints at the following:

(1) Continuous Walls: Vertical joints at the lesser of 1.5 times the wall height or 25 feet on center maximum.
(2) Corners and Intersecting Walls: First vertical joint from the corner at lesser of 1.25 times the wall height or 16 feet.
(3) Abrupt changes in wall height and wall thickness, such as adjacent to columns or pilasters.

TEMPORARY BRACING: Contractor is responsible for all temporary bracing of masonry during construction. Reference "CONTRACTOR RESPONSIBILITIES" section for further information and requirements.

POST-INSTALLED ANCHORS (INTO CONCRETE AND MASONRY)

REFERENCE STANDARDS: Conform to:
1) IBC Chapter 19 "Concrete"
2) ACI 318-11 "Building Code Requirements for Structural Concrete"
3) IBC Chapter 21 "Masonry"
4) ACI 530-11/ASCE 5-11/TMS402-11 "Building Code Requirements for Masonry Structures"

POST-INSTALLED ANCHORS: Install only where specifically shown in the details or allowed by SER. All post-Installed anchors types and locations shall be approved by the SER and shall have a current ICC-Evaluation Service Report that provides relevant design values necessary to validate the available strength exceeds the required strength. Submit current manufacturer's data and ICC ESR report to SER for approval regardless of whether or not it is a pre-approved anchor. Anchors shall be installed in strict accordance to ICC-ESR and manufacturer's instructions. No reinforcing bars shall be damaged during installation of post-installed anchors. Special inspection shall be per the TESTS and INSPECTIONS section. Anchor type, diameter and embedment shall be as indicated on drawings.

1. ADHESIVE ANCHORS: The following Adhesive-type anchoring systems have been used in the design and shall be used for anchorage to CONCRETE and MASONRY, as applicable and in accordance with corresponding current ICC ESR report. Drilled-in anchor embedment lengths shall be as shown on drawings, or not less than 7 times the anchor nominal diameter (7D).
   a. HILTI "HIT-HY 200" – ICC ESR-3187 for anchorage to CONCRETE with embedment depth less than or equal to 20 bar diameters
   b. SIMPSON "SET-XP" – ICC ESR 2508 for anchorage to CONCRETE, IAPMO 265 for anchorage to MASONRY
   c. HILTI "HIT-HY 70" – ICC ESR-2682 – for anchorage to MASONRY Only
2. EXPANSION ANCHORS: The following Expansion type anchors are pre-approved for anchorage to CONCRETE or MASONRY in accordance with corresponding current ICC ESR report:
   a. HILTI "KWIK BOLT TZ" – ICC ESR-1917 for CONCRETE Only
   b. SIMPSON "STRONG-BOLT 2" – ICC ESR-3037 for CONCRETE Only
   c. HILTI "KWIK BOLT 3 – ICC ESR-1385 for anchorage to MASONRY Only
   d. SIMPSON "WEDGE-ALL" – ICC ESR-1396 for anchorage to MASONRY Only
3. SCREW ANCHORS: The following Screw type anchor is pre-approved for anchorage to CONCRETE or MASONRY in accordance with corresponding current ICC ESR report:
   a. SIMPSON "TITEN HD" – ICC ESR-2713 for CONCRETE Only and ICC ESR-1056 for MASONRY Only

STRUCTURAL STEEL

REFERENCE STANDARDS: Conform to:
1) IBC Chapter 22 – "Steel"
2) ANSI/AISC 303-10 – "Code of Standard Practice for Steel Buildings & Bridges"
3) AISC – "Manual of Steel Construction", Fourteenth Edition (2010)
4) ANSI/AISC 360-10 – "Specification for Structural Steel Buildings"
5) AWS D1.1:2010 – "Structural Welding Code – Steel"
6) 2009 RCSC – "Specification for Structural Joints using High-Strength Bolts"

SUBMITTALS: Submit the following documents to the SER for review:

(1) SHOP DRAWINGS complying with AISC 360 Sections M1and N3 and AISC 303 Section 4.
(2) ERECTION DRAWINGS complying AISC 360 Sections M1and N3 and AISC 303 Section 4.

Make copies of the following documents "Available upon Request" to the SER or Owner's Inspection Agency in electronic or printed form prior to fabrication per AISC 360 Section N3.2 requirements:

(1) Fabricator's written Quality Control Manual that includes, as a minimum:
    a. Material Control Procedures
    b. Inspection Procedures
    c. Non-conformance Procedures
(2) Steel & Anchor Rod suppliers' Material Test Reports (MTR's) indicating the compliance with specifications.
(3) Fastener manufacturer's Certification documenting conformance with the specification.
(4) Filler metal manufacturer's product data for SMAW, FCAW and GMAW indicating:
    a. Product specification compliance
    b. Recommended welding parameters
    c. Recommended storage and exposure requirements including baking
    d. Limitations of use
(5) Welded Headed (Shear) Stud Anchors Manufacturer's certification indicating the meet specifications.
(6) Weld Procedure Specifications (WPS's) for shop and field welding.
(7) Manufacturer's Certificates of Conformance for electrodes, fluxes and gases (welding consumables).
(8) Procedure Qualification Records (PQR's) for WPS's that are not prequalified in accordance with AWS.
(9) Welding personnel Performance Qualification Records (WPQR) and continuity records conforming to AWS standards.

MATERIALS:
Structural steel materials shall conform to materials and requirements listed in AISC 360 section A3 including, but not limited to:

Wide Flange (W), Tee (WT) Shapes.................... ASTM A992 Fy = 50 ksi
Structural (S), (M) & (HP) Shapes .... ASTM A36, Fy = 36 ksi
Channel (C) & Angle (L) Shapes .... ASTM A36, Fy = 36 ksi
Structural Plate (PL).. ASTM A36, Fy = 36 ksi
High Strength Plate (Gr 50 PL) .... ASTM A572, Fy = 50 ksi
Hollow Structural Section – Square/Rect (HSS).. ASTM A500, Grade B Fy = 46 ksi
Structural Pipe, (PIPE) 12" dia. and less .... ASTM A53, Grade B Fy = 35 ksi
Hollow Structural Section – Round (HSS) .... ASTM A500, Grade B Fy = 42 ksi
High Strength, Heavy Hex Structural Bolts.......... ASTM A325/F1852, Type 1 or 3, Plain
Heavy Hex Nuts .... ASTM A563, Grade and Finish per RCSC Table 2.1
Washers (Hardened Flat or Beveled) .... ASTM F436, Grade and Finish per RCSC Table 2.1
Rods (Anchor Bolts, typical)................................ ASTM F1554, Gr. 36
Anchor Rods (High Strength)............................... ASTM F1554, Gr. 55 (weldable) per Supplement S1
Threaded Rods .... ASTM A36, Fy = 36 ksi
Welded Headed (shear) Stud Anchors .... ASTM A108 – Nelson/TRW S3L
Welded Headed Stud (WHS) Anchors................. ASTM A108 – Nelson/TRW H4L
Dowel Bar Anchors (DBA) .... ASTM A496 – Nelson/TRW D2L, Fy = 70 ksi

STRUCTURAL JOINTS USING HIGH-STRENGTH BOLTS:

1) ASTM A325-N bolts – "threads NOT excluded in the shear plane".
2) High-strength bolted joints have been designed as "BEARING" connections.
3) Provide ASTM Bolt Grade and Type as specified in the Materials section above.
4) Provide Washers over outer ply of slotted holes and oversize holes per RCSC Table 6.1.
5) Provide Nut and Washer grades, types and finishes conforming to RCSC specification Table 2.1.
6) Provide *fastener assemblies* from a single supplier.
7) Joint Types shall be:
   a. ST - "Snug Tight", for typical beam end "shear" connections, unless noted otherwise.
   b. SC - "Slip Critical", where specifically indicated. Provide with Class A Faying surface.
8) Install bolts in joints in accordance with the RCSC Specification Section 8 and Table 4.1.
9) Inspection is per RCSC Section 9.

ANCHORAGE to CONCRETE:

1) EMBEDDED STEEL PLATES for Anchorage to Concrete: Plates (PL) embedded in concrete with studs (WHS) or dowel bar anchors (DBA) shall be of the sizes and lengths as indicated on the plans with minimum 1/2" dia. WHS x 6" long but provide not less than ¾" interior cover or 1 ½" exterior cover to the opposite face of concrete, unless noted otherwise.

2) COLUMN ANCHOR RODS and BASE PLATES: All columns (vertical member assemblies weighing over 300 pounds) shall be provided with a **minimum of four ¾" diameter anchor rods**. Column base plates shall be at least ¾" thick, unless noted otherwise. Cast-in-place anchor rods shall be provided unless otherwise approved by the Engineer. Unless noted otherwise, embedment of cast-in-place anchor rods shall be 12 times the anchor diameter (12D).

FABRICATION:

1) Conform to AISC 360 Section M2 "Fabrication" and AISC 303 Section 6 "Shop Fabrication".

2) Quality Control (QC) shall conform to:
   a. AISC 360 Chapter N "Quality Control and Quality Assurance" and
   b. AISC 303 Section 8 "Quality Control".
   c. Fabricator and Erector shall establish and maintain written Quality Control (QC) procedures per AISC 360 section N3.
   d. Fabricator shall perform self-inspections per AISC 360 section N5 to ensure that their work is performed in accordance with Code of Standard Practice, the AISC Specification, Contract Documents and the Applicable Building Code.
   e. QC inspections may be coordinated with Quality Assurance inspections per Section N5.3 where fabricators QA procedures provide the necessary basis for material control, inspection, and control of the workmanship expected by the Special Inspector.

WELDING:

1) Welding shall conform to AWS D1.1 with Prequalified Welding Processes except as modified by AISC 360 section J2. Welders shall be qualified in accordance with AWS D1.1 requirements.
2) Use 70ksi strength, low-hydrogen type electrodes (E7018) or E71T as appropriate for the process selected.
3) Welding of high strength anchor rods is prohibited unless approved by Engineer.
4) Welding of headed stud anchors shall be in accordance with AWS D1.1 Chapter 7 "Stud Welding".

ERECTION:

1) Conform to AISC 360 Section M4 "Erection" and AISC 303 Section 7 "Erection".
2) Conform to AISC 360 Chapter N "Quality Control and Quality Assurance" and AISC 303 Section 8.
   a. The Erector shall maintain detailed erection quality control procedures that ensure that the work is performed in accordance with these requirements and the Contract Documents.
3) Steel work shall be carried up true and plumb within the limits defined in AISC 303 Section 7.13.
4) High strength bolting shall comply with the RCSC requirements including RCSC Section 7.2 "Required Testing", as applicable and AISC 360 Chapter J, Section M2.5 and Section N5.6.
5) Welding of HEADED STUD ANCHORS shall be in accordance with AWS D1.1 Chapter 7 "Stud Welding.
6) Provide Headed (Shear) Stud Anchors welded through the metal deck to tops of beams denoted in plans.
7) The contractor shall provide temporary bracing and safety protection required by AISC 360 Section M4.2 and AISC 303 Section 7.10 and 7.11.

PROTECTIVE COATING REQUIREMENTS:

1) SHOP PAINTING: Conform to AISC 360 Section M3 and AISC 303 Section 6.5 unless otherwise specified by the project specifications.

2) Steel need not be primed or painted unless noted otherwise on the drawings or in the project specifications. Conform to AISC 360 Section M3 and AISC 303 Section 6.5 unless a multi-coat system is required per the project specifications.

METAL ROOF DECK

REFERENCE STANDARDS: Conform to:
1) ICC Report ESR-2047 reissued July 2015
2) ~~AISI NAS - "American Iron and Steel Institute North American Specifications" or ASCE 8-02 - "Specification for the Design of Cold-Formed Stainless Steel Structural Members"~~
3) NASPEC 2007 – "North American Specification for the Design of Cold-Formed Steel Structural Members"
4) AISI - "Specification for the Design of Cold-Formed Steel Structural Members",
5) AWS D1.3 - "Structural Welding Code - Sheet Steel"

SUBMITTALS: Submit shop drawings to the Architect/Engineer for review. Shop drawings shall include material type, design loads, diaphragm capacities, span layout by SSE, deck attachments, metal deck edge form design & calculations, and shoring requirements. All openings shall be indicated. Any alternate deck types and gages shall be submitted to the Architect/Engineer for review prior to fabrication and shall include a valid ICC evaluation report, calculations & shop drawings (component design drawings) stamped by the SSE.

MATERIAL: ASTM A653 – SS Designation, Grade 33. Zinc coated per A653, G60. Minimum yield strength shall be 38 ksi.

TYPE: Deck shall be Epic Metals type ER2RA and ER2R as shown on the structural drawings based on 3-span, unshored condition. Shoring is required for conditions other than 3-span. To eliminate shoring, the contractor may choose to use a heavier gage deck with approval by the SER.

DIAPHRAGM CAPACITY: Deck and attachments shall be capable of resisting the diaphragm shears where indicated on the drawings. Submit ICC Evaluation Report as proof of compliance.

INSTALLATION: Install deck in accordance with supplier's instructions and shop drawings. Attachments shall resist the uplift forces and the diaphragm shear forces shown on the drawings. Welding shall conform to AWS D1.3. Welders shall have current Light Gage Certification. Minimum end lap shall be 2" centered over supports. Minimum bearing shall be 2."

OPENINGS: Deck openings less than 6" do not require reinforcement. For larger openings, refer to typical details.

ACCESSORIES: Deck manufacturer shall furnish shoring plans, closure plates, ridge and valley plates, cant strips, sump pans, flashing and all other light gage steel material required to complete the work.

DECK FASTENING: Minimum deck fastening shall be as follows, unless noted otherwise on the drawings:

- 1/2" diameter puddle welds each rib at transverse and perimeter supports,
- 1/2" diameter puddle welds at 6" OC at longitudinal supports,
- Side lap connections necessary to develop the shear loading indicated on the diaphragm schedule, but not less than **574** PLF

OPEN WEB STEEL JOISTS AND JOIST GIRDERS (OWSJ)

REFERENCE STANDARDS: Conform to:
1) IBC Section 2207 – "Steel Joists"
2) SJI – "Standard Specifications for Open Web Steel Joists, K-Series"
3) SJI – "Standard Specifications for Long span Steel Joists, LH-Series and Deep Long span Steel Joists, DLH Series"
4) SJI – "Standard Specifications for Joist Girders"

SUBMITTALS: Comply with IBC 2207. Submit structural calculations and shop drawings (component design drawings) stamped by a SSE. Reference DEFERRED SUBMITTALS above for additional information.

SIZE: Joists and girders shall be designed and fabricated by a member of the Steel Joist Institute (SJI) for the loads indicated above and on the drawings. Design live loads are listed under THE "DESIGN CRITERIA AND LOADS" section in these "STRUCTURAL GENERAL NOTES". Design dead loads are shown in the "BIDDER DESIGNED" table in the same section. Design shall include the effects of wind up-lift as well as drifting and sliding snow, when applicable, in accordance with IBC Section 1608, as shown on the structural plans, and for fire sprinkler support loads, where applicable. Scissor trusses are to be designed with a maximum horizontal displacement of **1** inch. Deflection limits shall be as noted under DEFERRED SUBMITTALS.

ERECTION AND STABILITY: The overall stability of the joist system is the responsibility of the SSE (SJI supplier). Careful attention shall be given to the stability of the joists during erection in accordance with the IBC and all sections of the SJI Manual. Specifically, sections in the SJI Manual on "Bridging", "Erection Stability and Handling" and "Handling and Erection" shall be carefully followed by the SSE (SJI supplier) to provide stability of all members at all times.

ACCESSORIES: All bridging, collector-drag struts, drag splice plates, bottom chord bracing, girders and related connection hardware shall be provided and designed by the supplier. All additional erection bolts, stabilizer plates, and any other additional steel to meet OSHA standards, shall be coordinated by the joist manufacturer and shall be provided by the steel detailer/supplier. Supplier to provide sloped bearing seats where required for roof slope. Reference drawings for non-standard joist end bearing lengths.

PRIMER COLOR: All steel shall be painted per project specifications with one coat of standard shop primer unless noted otherwise on the drawings or in the specifications.

COLD-FORMED STEEL FRAMING

REFERENCE STANDARDS: Conform to:
(1) AISI "North American Specification for the Design of Cold-Formed Steel Structural Members - 2007 Edition."
(2) AISI "Standard for Cold Formed Steel Framing – General Provisions"
(3) AISI "Standard for Cold Formed Steel Framing – Header Design"
(4) AISI "Standard for Cold Formed Steel Framing – Wall Stud Design"
(5) AISI "Standard for Cold Formed Steel Framing – Lateral Design"
(6) AISI "Standard for Cold Formed Steel Framing – Truss Design"
(7) AWWC "Wall and Ceiling Standards" Sec. 9.8 "Exterior Steel Studs Wall Systems."
(8) AWS D1.3 "Structural Welding Code - Sheet Steel."

SUBMITTALS: Submit panelized wall shop drawings and floor / roof framing shop drawings for review by the SER, GC and Architect. Shop drawings shall indicate member sizes, spacing, and materials; shop and field assembly details and connections; type and location of welds and other fasteners; bridging and bridging anchorage. Submit product data and proof of ICC approval for framing members and fasteners.

MATERIALS:

Structural Sections	54, 68 and 97-mil; ASTM A653 Grade D or ASTM A1011 Grade 50, Min Fy=50 KSI, 33 and 43-mil; ASTM A653 Grade A, or ASTM A1011 Grade 33, Min Fy=33 KSI
Sheet Metal Screws	Grabber or Buildex TEK-Self-Drilling, #10 screws unless noted otherwise on drawings; ASTM C1513 or SER approved alternate
Fasteners to Steel	Hilti X-U 0.157" Diameter Power Actuated Fasteners – ICC ESR-2269
Fasteners to Concrete	Hilti X-U 0.157" Diameter Power Actuated Fasteners with ¾" embedment– ICC ESR-2269
Weld Material	E60XX electrodes conforming to AWS D1.3

GALVANIZED MATERIAL: Studs and track shall be galvanized in accordance with ASTM A653, G60, unless in contact with pressure treated wood. If in contact with pressure treated wood, use G90 or greater coatings. Fastenings not shown on the drawings shall be as recommended by the manufacturer.

SIZE AND PROFILE: Cold-formed steel framing members shall be as specified by the Steel Stud Manufacturer's Association (SSMA) ICC Evaluation Report ESR-3064P and of the size and profile as shown on the drawings. Alternate members equivalent in shape, size, and strength by manufacturers not members of the Steel Stud Manufacturer's Association shall be subject to review and approval by the Architect / Engineer.

JOISTS: Provide C-shaped joists with stiffened flanges (S-sections in SSMA). Spans are assumed to be continuously sheathed at the top flange. A minimum 3-1/2" bearing shall be provided at each end of each joist. Add web stiffeners if bearing is less than 3-1/2", but no less than 1-1/2". All joists must be braced laterally at each end by track or blocking. Joist bridging shall be a maximum 8'-0" oc.

CONNECTORS and FASTENERS: Connectors shall be installed per the manufacturer's instructions. All screws shall be snug with steel surface and screws shall penetrate into steel studs by a minimum of three exposed threads. Connections shall not be stripped. Screws shall be installed a minimum of 3/8" from steel edges and no less than ¾" o.c. spacing. Screws or pins in wood shear walls or horizontal diaphragms shall be driven so that the head is no more than 1/16" below the surface of the sheathing. Where connector straps connect two members, place one-half of the screws in each member.

When fastening to steel, Powder Actuated Fasteners shall be installed a minimum of 1/2" from steel edges and with no less than 1" o.c. spacing. When fastening to concrete, Powder Actuated Fasteners shall be installed a minimum of 3" from concrete edges and with no less than 4" o.c. spacing. Powder Actuated Fasteners shall not be used for hanging applications.

FULL-HEIGHT NON-LOAD-BEARING STUD WALLS: Full height stud walls shall be attached to concrete slabs above with deflection track to allow for differential vertical floor deflections under live loads. Maintain **¾"** gap between top of studs and slab unless noted otherwise on plan.

MEMBER CONDITION: All structural cold-formed framing members must be in good condition. Damaged members, members with cracking in the steel at the bend radius locations, and members with significant red rusting or scaling of the protective coating are unacceptable and must be replaced, unless approved by the SER. Handling and lifting of prefabricated panels shall not cause permanent distortion to any member or collateral material. Members not meeting tolerances listed below shall be replaced prior to loading.

ERECTION and TOLERANCES: Axial load bearing cold-formed steel framing shall be erected true and plumb per the requirements and within the specified tolerances listed below. For purposes of this section, camber is defined as the deviation from straightness of a member or any portion of a member with respect to its major axis, and sweep is defined as the deviation from straightness of a member or any portion of a member with respect to its minor axis.

- For axial load bearing studs, out of plumbness and out of straightness (camber and sweep) shall not exceed 1/1000th of the member length.
- For joists, out of straightness (camber and sweep) shall not exceed 1/1000th of the member length.
- For track, camber shall not exceed 1/1000th of the member length.
- Erect framing in accordance with manufacturer's instruction and shop drawings.
- Studs shall seat into top and bottom tracks. The gap between the end of the stud and the web of the track shall not exceed 1/16" for axial load bearing studs.
- Joists and end stiffeners shall be located directly over axial load bearing studs. The use of track as a load distribution member is not permitted.
- All axially loaded members shall be aligned vertically to allow for full transfer of the loads down to the foundation.

FIELD CUTS AND NOTCHES: Field cuts and notches of any kind (including widening pre-punched holes) are NOT allowed in any structural cold-formed steel member without prior approval from SER.

PERMANENT WALL BRACING AND BRIDGING: Double flat strap or channel bridging as specified on the structural drawings shall be installed at 4'-6" oc maximum unless noted otherwise, and adequately braced prior to loading studs. Bridging anchorage design to be based on "All Steel Design" (mechanically braced) or "Sheathing Braced Design" per AISI S212-07 - "North American Standard for Cold-Formed Steel Framing – Wall Stud Design 2007". Reference the floor framing plan notes for type of design used on that floor.

WOOD FRAMING

REFERENCE STANDARDS: Conform to:
(1) IBC Chapter 23 "WOOD"
(2) NDS - "2012 National Design Specification (NDS) for Wood Construction"
(3) ANSI/AF&PA – SDPWA-08: Special Design Provisions for Wind and Seismic
(4) APA PDS—04 Plywood Design Specification
(5) ANSI/TPI 1-2007 "National Design Standard for Metal-Plate-Connected Wood Truss Construction"
(6) BCSI "Guide to Good Practice for Handling, Installing & Bracing of Metal Plated Connected Wood Trusses"
(7) TPI DSB "Recommended Design Specification for Temporary Bracing of Metal Plate Connected Wood Trusses"
(8) APA Report TT-045B "Minimum Nail Penetration for Wood Structural Panel Connections Subject to Lateral Loads"

IDENTIFICATION: All sawn lumber and pre-manufactured wood products shall be identified by the grade mark or a certificate of inspection issued by the certifying agency.

MATERIALS:

- Sawn Lumber: Conform to grading rules of WWPA, WCLIB or NLGA and Table below. Finger jointed studs acceptable at interior walls only.

TABLE of SOLID SAWN LUMBER

Member Use	Size	Species	Grade
Wall Stud	2x4, 3x4, 2x6, 3x6	Doug Fir Larch	No. 2
Sill Plate	2x4, 3x4, 2x6, 3x6	PT Doug Fir Larch	No. 2
Post	4x4, 4x6, 4x8	Doug Fir Larch	No. 2
Floor or Roof Joist	2x6 through 2x12	Doug Fir Larch	No. 2
Beam	4x8 through 4x12	Doug Fir Larch	No. 2
Beam	6x8 through 6x12	Doug Fir Larch	No. 1
Post or Timber	6x6, 8x8	Doug-Fir Larch	No. 1

- Wood Structural Sheathing (Plywood): Wood APA-rated structural sheathing includes: all veneer plywood, oriented strand board, waferboard, particleboard, T1-11 siding, and composites of veneer and wood based material with T&G joint. **Architect** may disallow OSB. Confirm with **Architect**. Conform to "Construction and Industrial Plywood" based on Product Standard PS 1-07 by the U.S. Dept. of Commerce, and "Performance Standard for Wood-Based Structural-Use Panels" based on Product Standard PS 2-04 by the U.S. Dept. of Commerce and "Plywood Design Specification" based on APA PDS—04 by the American Plywood Association. Unless noted otherwise, sheathing shall comply with the following table:

TABLE of SHEATHING - Use, Minimum Thickness and Minimum APA Rating

Location	Thickness	Span Rating	Plywood Grade	Exposure
Roof	15/32"	32/16	C-D	1
Floor	23/32" T&G	24 OC	STURD-I-FLOOR	1
Walls	15/32"	32/16	C-D	1

Unless noted otherwise on drawings, install roof and floor panels with long dimension across supports and with panel continuous over two or more spans. End joints shall occur over supports. Provide 1/8" space between panel ends and edges.

- Timber Connectors: Shall be "Strong Tie" by Simpson Company as specified in their latest catalog. Alternate connectors by other manufacturers may be substituted provided they have current ICC approval for equivalent or greater load capacities and are reviewed and approved by the SER prior to ordering. Connectors shall be installed per the manufacturer's instructions. Where connector straps connect two members, place one-half of the nails or bolts in each member. Where straps are used as hold-downs, nail straps to wood framing just prior to drywall application, as late as possible in the framing process to allow the wood to shrink and the building to settle. Premature nailing of the strap may lead to strap buckling and potential finish damage.

  Where connectors are in exposed exterior applications in contact with preservative treated wood (PT) other than CCA, connectors shall be either batch hot-dipped galvanized (HDG), mechanically galvanized (ASTM B695, Class 55 minimum) stainless steel, or provided with 1.85 oz/sf of zinc galvanizing equal to or better than Simpson ZMAX finish.

  Nail straps to wood framing as late as possible in the framing process to allow the wood to shrink and the building to settle. Premature nailing of the strap may lead to strap buckling and potential finish damage.

- Fasteners (nails, bolts, screws, etc) attaching timber connectors (joist hangers, post caps and bases, etc) to PT wood shall have similar corrosion resistance properties (matching protective treatments) as the protected connector. Fasteners (nails, bolts, screws, etc) attaching sawn timber members or sheathing (shear walls) to PT wood be corrosion resistant; nails and lag bolts shall be either HDG (ASTM A153) or stainless steel. Verify the suitability of the fastener protection/coating with the wood treatment chemical manufacturer/supplier.

  Provide washers under the heads and nuts of all bolts and lag screws bearing on wood.

- Lag Bolts/Bolts: Conform to ASTM A307 and IBC Section 2304.9.

NAILING REQUIREMENTS: Conform to IBC Section 2304.9 "Connections and fasteners." Unless noted on plans, nail per Table 2304.9.1. Nailing for roof/floor diaphragms/shear walls shall be per drawings. Nails shall be driven flush and shall not fracture the surface of sheathing. Alternate nails may be used but are subject to review and approval by the Structural Engineer. Substitution of staples for the nailing of rated sheathing is subject to review by the structural engineer prior to construction.

STANDARD LIGHT-FRAME CONSTRUCTION: Unless noted on the plans, construction shall conform to IBC Section 2308 "Conventional Light-Frame Construction."

NAILERS ON STEEL COLUMNS and BEAMS: Wood 3x nailers are generally required on all HSS columns and steel beams abutting or embedded within wood framing. Unless noted otherwise, attach with 5/8" diameter bolts or welded studs at 16" on centers. Wood nailers on beams supporting joist hangers shall not overhang the beam flange by more than ¼".

MOISTURE CONTENT: Wood material used for this project shall have maximum moisture content of 19% except for the pressure-treated wood sill plate. Refer to TESTING & INSPECTIONS for the verification of these limits. The maximum moisture content required may be less than 19% when based on a particular cladding/insulation system. Refer to the Architect's drawings, and project specifications, or with cladding installer for maximum recommended moisture content.

PRESERVATIVE TREATMENT (PT): Wood materials are required to be "treated wood" in accordance with IBC Section 2304.11. "Decay and Termite Protection" shall conform to the appropriate standards of the American Wood-Preservers Association (AWPA) for sawn lumber, glued laminated timber, round poles, wood piles and marine piles. Follow American Lumber Standards Committee (ALSC) quality assurance procedures. Products shall bear the appropriate mark. Fasteners or anchors in treated wood shall be of stainless steel or hot-dipped galvanized or as per IBC 2304.9.5.

74858PE
OREGON
MARCH 23, 2011
SHIRLEY CHALUPA
EXPIRES: 12-31-15

Robertson Sherwood Architects pc
132 East Broadway, Suite 540
Eugene, Oregon 97401
P 541 | 342.8077
F 541 | 345.4302
www.robertsonsherwood.com

Newport Aquatics Center
225 SE Avery Street
Newport, OR 97365

DCI ENGINEERS®
400 SW 6TH AVENUE • SUITE 605
PORTLAND, OREGON 97204
PHONE: (503) 242-2448 • FAX: (503) 242-2449
WEBSITE: www.dci-engineers.com
CIVIL / STRUCTURAL

AD3 ADDENDUM 3 7–22–2015

STRUCTURAL GENERAL NOTES
CONTINUED

Drawn By IK
Checked SC
Date 17 JUNE 2015
DCI Project # 14091-0028

S1.2

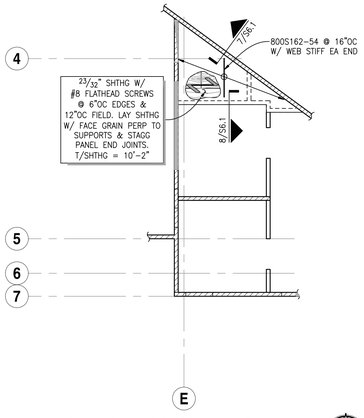

MECHANICAL ACCESS PLATFORM PLAN

SCALE: 1"=10'-0"

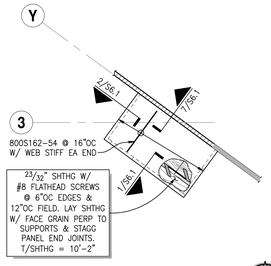

LIGHT STORAGE PLATFORM PLAN

SCALE: 1"=10'-0"

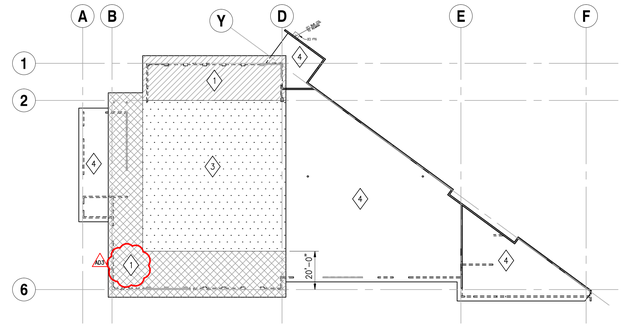

DIAPHRAGM SCHEDULE		
TYPE	SIDELAP SPACING SEE NOTE 1	ALLOWABLE SHEAR (PLF)
1	12"OC	1109
2	NOT USED	–
3	24"OC	665
4	24"OC	710

NOTES:

[1] SIDELAP CONNECTION SHALL BE 1½" LONG ARC SEAM WELD OR 2" LONG FILLET WELDS PER ESR-2047.

[2] CONNECT DECK TO ALL TRANSVERSE AND PERIMETER SUPPORTS WITH ½"ø PUDDLE WELDS AT EACH RIB.

[3] CONNECT DECK TO ALL LONGITUDINAL SUPPORTS WITH ½"ø PUDDLE WELDS @ 6"OC.

403

DIAPHRAGM KEY PLAN PLAN

SCALE: 1/8"=1'-0"

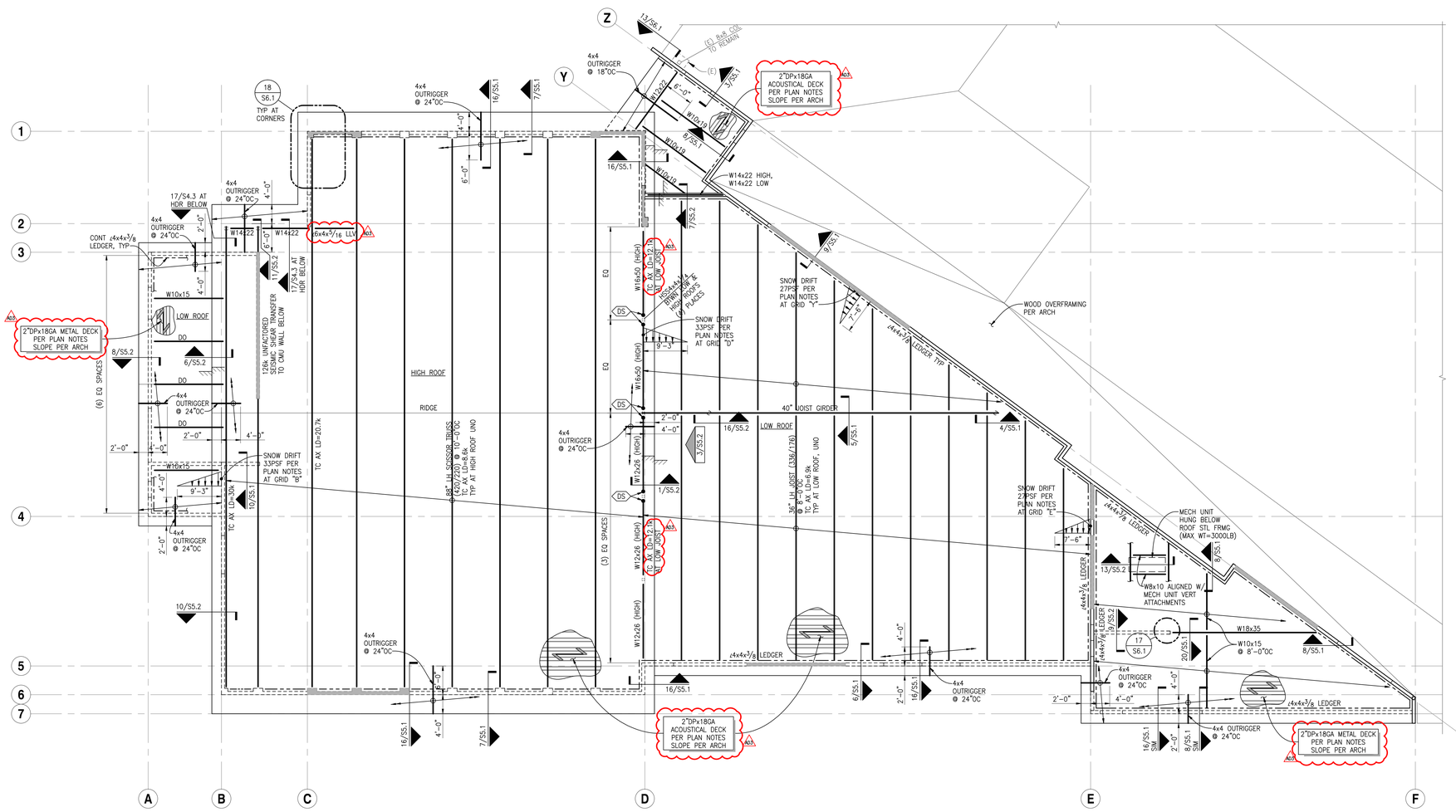

ROOF FRAMING PLAN

SCALE: 1"=10'-0"

ROOF FRAMING PLAN NOTES:

1. STRUCTURAL GENERAL NOTES, DESIGN CRITERIA, ABBREVIATIONS AND LEGEND PER S1.1 THRU S1.3.
2. VERIFY ALL DIMENSIONS AND ELEVATIONS WITH THE ARCHITECT'S DRAWINGS. ALL EXISTING DIMENSIONS SHALL BE FIELD VERIFIED.
3. ALL DUCTS, CHASES AND PIPES SHALL BE PER MECHANICAL, PLUMBING, ELECTRICAL AND SPRINKLER DRAWINGS.
4. T/STL X'-X" INDICATES TOP OF STEEL (T/STL) ELEVATION AT JOISTS (T/STL = B/DECK) UNO; AT GIRDERS SUPPORTING OPEN WEB STEEL JOISTS (T/STL) = –4½" FOR BEARING SEAT DEPTH. STEEL JOISTS SHALL BE EQUALLY SPACED, TYPICAL UNO.
5. METAL DECK PER PLAN AND STRUCTURAL GENERAL NOTES. DECK ATTACHMENT REQUIREMENTS PER STRUCTURAL GENERAL NOTES.
6. TYPICAL ROOF DECK OVERHANG TO BE 6" FROM CENTERLINE OF BEAM, UNO.
7. NUMBERS INDICATED ON PLAN ADJACENT TO JOIST CALLOUT SHOWN THUS: (XXX/XXX) INDICATES TOTAL LOAD AND LIVE LOAD (IN PLF) FOR WHICH JOISTS ARE TO BE DESIGNED BY OTHERS.
8. SNOW DRIFTS TO BE ADDED TO FLAT ROOF SNOW LOAD Pf PER STRUCTURAL GENERAL NOTES.
9. ALL TOP CHORD AXIAL LOADS (TC AX LD) SHOWN ON JOISTS AND GIRDERS ARE UNFACTORED SEISMIC LOAD 1.0E.
10. ROOF JOISTS TO BE DESIGNED FOR A NET UPLIFT WIND LOAD OF –20 PSF (ULTIMATE: 0.9D+W).
11. ROOF JOISTS AND GIRDERS ARE TO BE REVIEWED FOR ADDITIONAL LOADS FROM MECHANICAL UNITS AND PIPING. ADDITIONAL LOADING REQUIREMENTS PER PLAN. CONTRACTOR TO PROVIDE THE TRUSS/JOIST SUPPLIER WITH A DRAWING SHOWING THE LOCATION AND SUPPORT CONDITIONS FOR ALL MECHANICAL, ELECTRICAL, PLUMBING AND SPRINKLER LOADS. ROOF TRUSS/JOIST SUPPLIER IS RESPONSIBLE FOR ADDITIONAL FRAMING REQUIRED TO SUPPORT MECHANICAL EQUIPMENT, DUCTS, ELECTRICAL EQUIPMENT, PLUMBING AND FIRE PROTECTION.
12. LEDGER ANGLES ARE REQUIRED WHERE METAL DECKING INTERFACES WITH CMU WALLS. REQUIREMENTS PER PLAN.
13. CMU: WALL TYPES, REINFORCING SIZE AND SPACING PER CMU WALL REINFORCING SCHEDULE. ALL WALLS SHALL BE SOLID GROUTED, UNO. MATERIALS AND SPECIAL INSPECTION REQUIREMENTS AS PER STRUCTURAL GENERAL NOTES, UNO.
14. CONTRACTOR IS RESPONSIBLE FOR ALL TEMPORARY SHORING.
15. ⊸ INDICATES DRAG CONNECTION (SLIP–CRITICAL BOLTS ARE REQUIRED).
16. DS INDICATES DOUBLE SHEAR PLATE CONNECTION PER 20/S5.2.

STRUCTURAL REGISTERED PROFESSIONAL ENGINEER OREGON SHIRLEY CHUNG EXPIRES: 6-30-16

Robertson Sherwood Architects pc
132 East Broadway, Suite 540
Eugene, Oregon 97401
P 541 | 342.8077
F 541 | 345.4302
www.robertsonsherwood.com

225 SE Avery Street
Newport, OR 97365

DCI ENGINEERS®
400 SW 6TH AVENUE • SUITE 805
PORTLAND, OREGON 97204
PHONE: (503) 242-0445 • FAX: (503) 242-2449
WEBSITE: www.dciengineers.com
E-MAIL: mail@dciengineers.com

Newport Aquatics Center

ADDENDUM 3 7-22-2015

STRUCTURAL ROOF FRAMING PLAN

Drawn By	IK
Checked	SC
Date	17 JUNE 2015
DCI Project #	14091-0028

S2.2

14091-0028 S2.2.dwg 23-Jul-15 1:05 PM kenneth

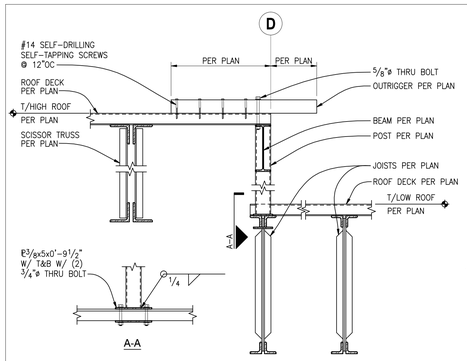

ROOF STEP DETAIL AT GRID D

SCALE: 3/4"=1'-0" (1)

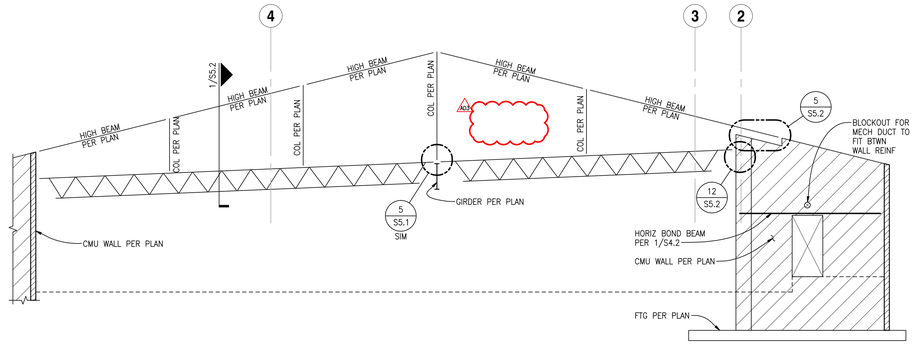

ELEVATION ALONG GRID D/5

SCALE: 1/8"=1'-0" (3)

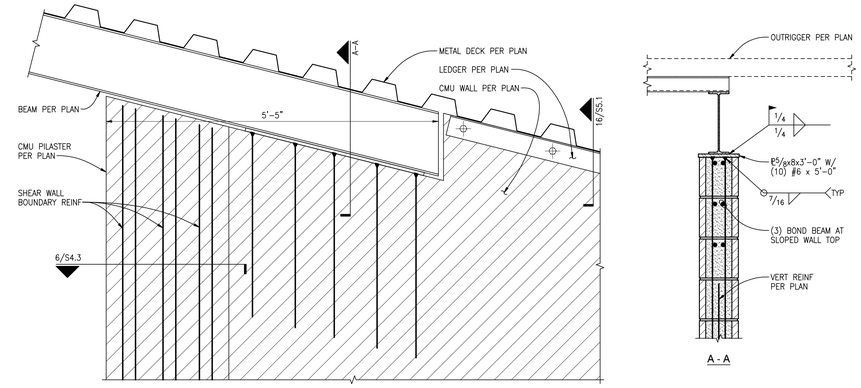

BEAM BEARING OVER CMU WALL

SCALE: 1"=1'-0" (5)

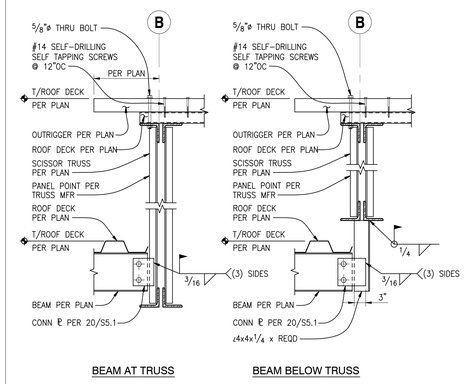

BEAM AT TRUSS DETAIL

SCALE: 3/4"=1'-0" (6)

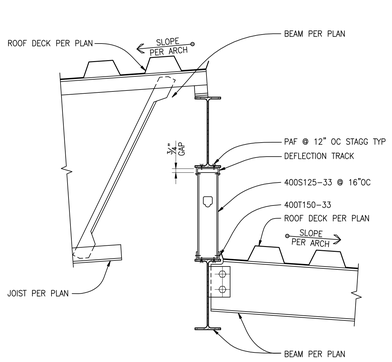

DETAIL AT ROOF STEP

SCALE: 1"=1'-0" (7)

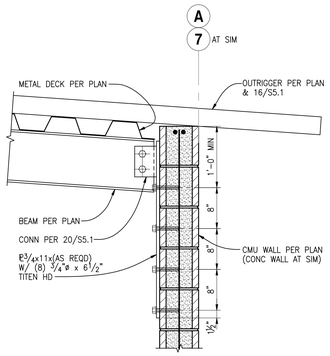

STEEL BEAM TO CMU WALL DETAIL

SCALE: 1"=1'-0" (8)

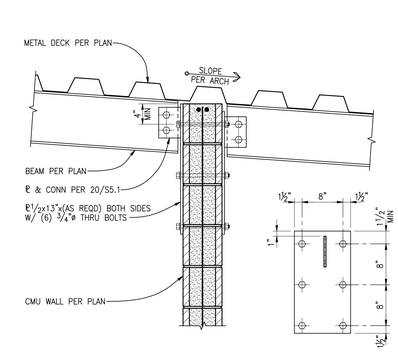

STEEL BEAM TO CMU WALL DETAIL

SCALE: 1"=1'-0" (9)

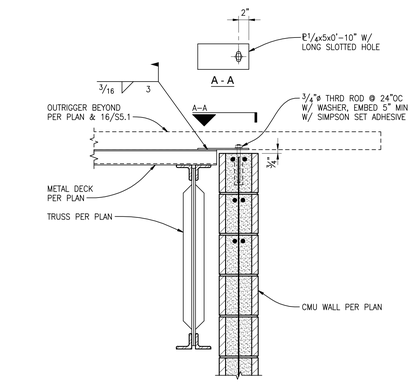

ROOF DETAIL AT NON-BEARING CMU WALL

SCALE: 1"=1'-0" (10)

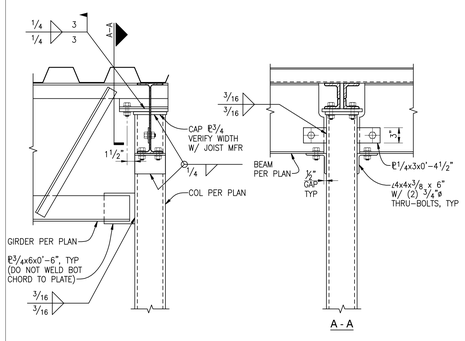

GIRDER TO COLUMN CONNECTION AT GRID 2

SCALE: 1"=1'-0" (11)

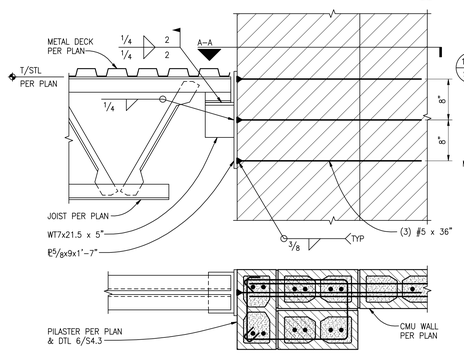

LOW JOIST TO CMU PILASTER AT GRID 'D'

SCALE: 1"=1'-0" (12)

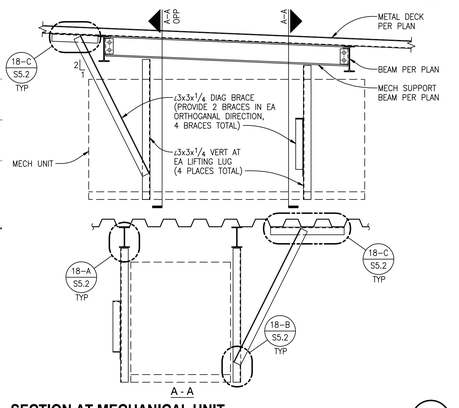

SECTION AT MECHANICAL UNIT

SCALE: 1/2"=1'-0" (13)

NOTE:

ADDITIONAL CONNECTION GEOMETRY, CONFIGURATIONS AND NOTES PER SINGLE SHEAR PLATE (SINGLE ROW) CONNECTIONS DETAIL [05201].

TYPICAL DOUBLE SHEAR PLATE CONNECTION

BOLTED DOUBLE SHEAR PLATE CONNECTION - SCHEDULE "B" (DS)

7/8" Ø - A325-N		SINGLE ROW		BEAM Fy=50KSI – CONNECTION PLATE Fy=36KSI					
						UNCOPED BEAM CONNECTION CAPACITY – ASD (1) (KIPS)		COPED BEAM CONNECTION CAPACITY – ASD (1) (KIPS)	
BEAM SIZE	"N" BOLTS REQUIRED	MIN SHEAR PLATE OR WT STEM THICKNESS	MIN HSS COLUMN WALL THICKNESS (2)	WELD SIZE t (4)	WELD DEPTH OF GROOVE 'S (3)	TO HSS COLUMN	TO WF BEAM, WF COL, OR PLATE	SINGLE COPE (5)	DOUBLE COPE (5)
C8,C9,C10	2	1/4"	5/16"	3/16"	CJP	19.2	20.7	7.6	NR (6)
W8	2	1/4"	5/16"	3/16"	CJP	19.2	23.2	7.6	NR (6)
W10	2	1/4"	5/16"	3/16"	CJP	19.2	25.9	11.0	11.4
C12,C15	3	1/4"	5/16"	3/16"	CJP	38.1	38.9	17.5	19.0
W12	3	1/4"	5/16"	3/16"	CJP	38.1	41.0	18.3	19.6
W14	3	5/16"	5/16"	1/4"	5/16"	38.1	47.1	31.2	23.9
W16	4	5/16"	5/16"	1/4"	5/16"	58.6	68.3	46.4	36.6
W18	5	5/16"	5/16"	1/4"	5/16"	79.1	102.4	73.3	71.9
W21	6	3/8"	5/16"	5/16"	1/4"	99.2	141.3	119.0	115.2
W24	7	3/8"	5/16"	5/16"	1/4"	118.7	181.8	178.2	167.3
W27	8	3/8"	3/8"	5/16"	1/4"	165.3	208.8		NR (6)
W30	8	7/16"	3/8"	5/16"	5/16"	165.3	230.4	EQUAL TO UNCOPED CAPACITY	NR (6)
W33	9	7/16"	3/8"	5/16"	5/16"	186.8	259.2		NR (6)
W36	10	7/16"	3/8"	5/16"	5/16"	208.3	280.4		NR (6)

BOLTED DOUBLE SHEAR PLATE CONNECTION NOTES:

1. ALLOWABLE STRENGTH DESIGN (ASD) AND LOAD RESISTANCE FACTOR DESIGN (LRFD) VALUES AS NOTED IN SCHEDULE "B" ARE CAPACITIES BASED ON AISC 13TH EDITION.
2. UNCOPED CAPACITIES OF WT CONNECTIONS ARE VALID WITH MINIMUM NOMINAL HSS COLUMN WALL TABULATED THICKNESS. THE EFFECTIVE THROAT OF FLARE BEVEL GROOVE WELDS IS BASED ON OUTSIDE RADIUS OF HSS, AND IS TAKEN AS 5/8 TIMES THE HSS WALL THICKNESS BASED ON AWS D1.1, TABLE 2.1.
3. 'S' REFERS TO THE DEPTH OF PREPARATION FOR BEVEL GROOVE WELD. EFFECTIVE WELD SIZE (E), IS EQUAL TO S–1/8" PER AWS D.1.1.
4. WELD SIZES SHALL BE THE LARGER OF THE SIZE (t), TABULATED IN SCHEDULE "B" OR MINIMUM SHOWN IN TABLE 1.
5. ALLOWABLE COPE DEPTHS AND WIDTHS PER SCHEDULE "A" ON THE SINGLE SHEAR PLATE (SINGLE ROW) CONNECTIONS DETAIL [05201]. WHERE COPED BEAMS ARE CONNECTED TO HSS COLUMNS, THE CAPACITY OF THE CONNECTION SHALL BE THE LESSER OF THE TABULATED COPED VALUES OR THE "TO HSS COLUMN" VALUE PER SCHEDULE "B".
6. NR = NOT RECOMMENDED. DOUBLE COPES FOR THESE BEAMS ARE RESTRICTED BY CONNECTION GEOMETRY AND/OR LARGE REDUCTIONS IN SHEAR CAPACITY. DOUBLE COPES ARE POSSIBLE, BUT MUST BE CALCULATED FOR SPECIFIC BEAM AND GIRDER GEOMETRIES AND MUST BE DETAILED SEPARATELY.

TABLE 1
MINIMUM WELD SIZE TABLE

PLATE OR FLANGE THICKNESS (T) *	MINIMUM FILLET SIZE
T ≤ 1/2"	3/16"
1/2" < T ≤ 3/4"	1/4"
3/4" < T	5/16"

* MINIMUM WELD SIZE TO BE BASED ON THICKNESS OF THE THICKER PART.

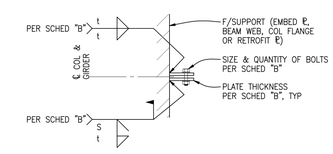

TYPICAL SECTION AT WIDE FLANGE COLUMN, BEAM WEB OR PLATE

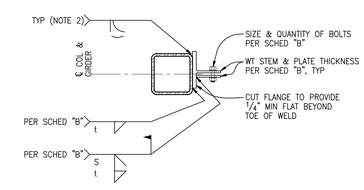

TYPICAL SECTION AT HSS COLUMN

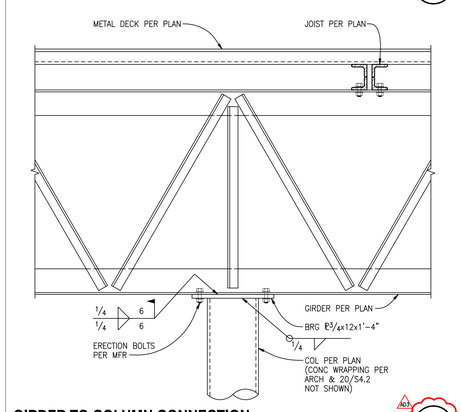

GIRDER TO COLUMN CONNECTION

SCALE: 1"=1'-0" (16)

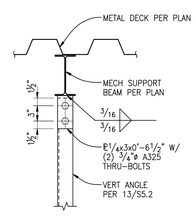

VERTICAL ANGLE TOP CONNECTION (A)

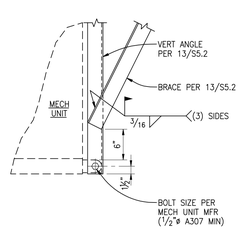

VERTICAL ANGLE & BRACE BOTTOM CONNECTION (B)

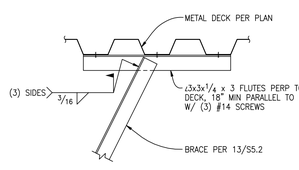

BRACE TOP CONNECTION (C)

MECHANICAL UNIT FRAMING CONNECTIONS

SCALE: 1"=1'-0" (18)

DOUBLE SHEAR PLATE (SINGLE ROW) CONNECTIONS (DS)

05203

SCALE: 1"=1'-0" (20)

STRUCTURAL DESIGNER
OREGON
SHIRLEY CHAN
EXPIRES: 6-30-16

Robertson Sherwood Architects pc
132 East Broadway, Suite 540
Eugene, Oregon 97401
P 541 | 342.8077
F 541 | 345.4302
www.robertsonsherwood.com
225 SE Avery Street
Newport, OR 97365

DCI ENGINEERS
400 SW 6TH AVENUE • SUITE 605
PORTLAND, OREGON 97204-2249
PHONE (503) 242-2484 • FAX (503) 242-2449
WEBSITE: www.dciengineers.com
CIVIL • STRUCTURAL • MECHANICAL

Newport Aquatics Center

ADDENDUM 3 7-22-2015

STRUCTURAL ROOF FRAMING DETAILS

Drawn By	IK
Checked	SC
Date	17 JUNE 2015
DCI Project #	14091-0028

S5.2