3200

EJCDC
ENGINEERS JOINT CONTRACT DOCUMENTS COMMITTEE

Change Order No. 3

Date of Issuance:	July 16, 2021	Effective Date:	August 20, 2021
Owner:	City of Newport	Owner's Contract No.:	15014
Contractor:	KSH Construction	Contractor's Project No.:	
Engineer:	Century West Engineering	Engineer's Project No.:	
Project:	SW Harbor Drive Roadway Improvements	Contract Name:	SW Harbor Drive Roadway Improvements

The Contract is modified as follows upon execution of this Change Order:

Description:

- Manhole 13 elevation change, T&M, **$7,386.34, 1 Day**
- CB3 modification, T&M, **$2,392.96, 0.5 Days**
- SW 13th St Stop Bar Addition, Unit Prices, **0 Days**
- Additional Demo for Sidewalk increase, T&M, **$224.67, 1 Day**

Attachments: *T&M #3, T&M #4*, T&M #5

CHANGE IN CONTRACT PRICE	**CHANGE IN CONTRACT TIMES** *[note changes in Milestones if applicable]*
Original Contract Price: $ 667,667.00	Original Contract Times: Substantial Completion: 120 Days; Ready for Final Payment: 150 Days; days or dates
[**Increase**] [Decrease] from previously approved Change Orders No. 1 to No. 2: $ 9,316.94	[**Increase**] [Decrease] from previously approved Change Orders No. 1 to No. 2: Substantial Completion: 4 Days; Ready for Final Payment: 4 Days; days
Contract Price prior to this Change Order: $ 676,983.94	Contract Times prior to this Change Order: Substantial Completion: 124 Days; Ready for Final Payment: 154 Days; days or dates
[**Increase**] [Decrease] of this Change Order: $ 10,003.97	[**Increase**] [Decrease] of this Change Order: Substantial Completion: 3 Days; Ready for Final Payment: 3 Days; days or dates
Contract Price incorporating this Change Order: $ 686,987.91	Contract Times with all approved Change Orders: Substantial Completion: 127 Days; Ready for Final Payment: 157 Days; days or dates

RECOMMENDED:	ACCEPTED:	ACCEPTED:
By:	By:	By:
Engineer (if required)	Owner (Authorized Signature)	Contractor (Authorized Signature)
Title:	Title: City Manager	Title: PRESIDENT
Date:	Date: 08-27-21	Date: 8-25-21

Digitally signed by Ron Weigel
Date: 2021.08.25 08:37:50-07'00'

KSH CONSTRUCTION CO.

CHANGE ORDER / EXTRA WORK PROPOSAL

Work Description: Additional 1' Depth of MH12 & MH13 and the Connecting 12" Pipe (approx. 25 FT)

Addt'l Contract Time: 1 day(s)

Date(s) of Work: TBD

LABOR

		Hrs		Rate	Total
1	Supervisor/Foreman	6	ST Hrs	87.24	$523.44
			OT Hrs	121.21	$0.00
2	Operator	6	ST Hrs	84.64	$507.86
			OT Hrs	116.66	$0.00
3	Laborer (2 ea.)	12	ST Hrs	65.53	$786.36
			OT Hrs	88.29	$0.00
4	Flagger		ST Hrs	58.45	$0.00
			OT Hrs	77.66	$0.00
5	Truck Driver	6	ST Hrs	42.32	$253.92
			OT Hrs	59.63	$0.00
	Total Labor				$2,071.58
	Markup 22%				$455.75
	Subtotal				$2,527.33

MATERIAL

	Description	Qty	Unit	Rate	Total
1	1' MH risers (see attache CPP quote)	1	LS	2,688.00	$2,688.00
2	3/4" - Cr. Rock	13	TON	22.00	$286.00
3					$0.00
4					$0.00
5					$0.00
6					$0.00
	Total Material				$2,974.00
	Markup 17%				$505.58
	Subtotal				$3,479.58

EQUIPMENT

	Description	Qty	Unit	Rate	Total
1	KSH Service Truck w/ Small Tools	6	HRS	20.00	$120.00
2	Pick-up w/ Small Tools	6	HRS	14.00	$84.00
3	Dump Trailer		HRS	10.00	$0.00
4	Cat 314 Exc.	6	HRS	50.00	$300.00
5	Cat 420 Backhoe	6	HRS	35.00	$210.00
6	Cat 930 Loader		HRS	45.00	$0.00
7	Cat 304 Mini Exc	2	HRS	35.00	$70.00
8	Cat CS433 Roller		HRS	30.00	$0.00
9	Freightliner Dump Truck	6	HRS	60.00	$360.00
10	Trail Max 3-Axle Tilt Deck Trailer		HRS	25.00	$0.00
11	Freightliner Water Truck	1	HRS	35.00	$35.00
12	Air Compressor w/ 90# Breaker		HRS	25.00	$0.00
	Total Equipment				$1,179.00
	Markup 17%				$200.43
	Subtotal				$1,379.43

TRUCKING / SPECIAL SERVICES

	Description	Qty	Unit	Rate	Total
1					$0.00
2					$0.00
3					$0.00
	Total Trucking				$0.00
	Markup 17%				$0.00
	Subtotal				$0.00

SUBCONTRACTOR

	Description	Qty	Unit	Rate	Total
1					$0.00
2					$0.00
3					
	Total Subcontractor				$0.00
	Markup 8%				$0.00
	Subtotal				$0.00

GRAND TOTAL $7,386.34

Columbia Precast Products
1765 Howard Way
Woodland, WA 98674
Phone: (360) 335-8400
Fax: (360) 335-8402

Quote Number: 21-968

Quote Date: 7/23/2021

Office

Bill to:	KSH Construction Co. 64682 Cook Ave #41 Bend, OR 97703	**Project:**	Newport Newport, OR 97365
Contact:	Kelly Hugulet	**Project Manager:**	Kelly Hugulet
Phone :	(503) 390-1460 **Fax:** (503) 856-9305	**Phone :**	**Fax:**
Customer ID:	KSH **PO:** **ShipVia:**	**Sales Rep:**	Brett Black
Terms:	NET 30	**Bid Date:**	

Qty	Item	Description	Unit Price	TX	Extension
	Structure: ☐ **Risers**				
2	48RR15W	48" x 1' Riser	$95.00	☑	$190.00
3	Conseal1	Conseal CS 102 Joint Sealant - 1" x 14.5' Roll	$21.00	☑	$63.00
					$253.00
	Structure: ☐ **Other**	**Other**			
1	Freight	Freight Charge - Per Truckload	$2,435.00	☑	$2,435.00
					$2,435.00

Columbia Precast Products
1765 Howard Way
Woodland, WA 98674
Phone: (360) 335-8400
Fax: (360) 335-8402

Quote Number: 21-968

Quote Date: 7/23/2021

Office

Total Weight 1,779

Taxable	$0.00
Non-Taxable	$2,688.00
Sub Total	$2,688.00
Tax	$0.00
Total	$2,688.00

NOTES

All quantities are approximate and subject to change as per receipt of approved/revised plans, full information and/or unforeseen field changes. Unit prices shall apply.

Prices are firm for 30 days from date of quote.

All returns subject to 20% restocking fee. A copy of CPP invoice is required for all returns. Damaged or unsellable items will not be accepted. All special order product cannot be returned.

Lead time to be determined at time of submittal approval.

Unless explicitly stated otherwise, this quote does not include manhole channels.

Unless explicitly stated otherwise, contractor to supply all manhole, inlet and vault to invert connections.

Unless explicitly stated otherwise, this quote does not include any concrete coatings or liners.

Boom trucks may be available to off-load some products (limited by weight and reach) but must be explicitly requested prior to delivery. Additional crane charge of $195 per hour shall apply.

Quote assumes full truckloads. Additional freight charges will apply for partial loads.

Columbia Precast Products
1765 Howard Way
Woodland, WA 98674
Phone: (360) 335-8400
Fax: (360) 335-8402

Quote Number: 21-968

Quote Date: 7/23/2021

Office

1. **TERMS OF PAYMENT**: Buyer agrees to pay interest at the maximum legal rate allowed by law on any invoice amount past due until paid, both before and after judgment, and further agrees to pay all costs incurred in collection of past due amounts, including reasonable attorneys' fees, whether suit is filed thereon or not. Buyer agrees that venue for any litigation between Seller and Buyer will be Cowlitz County, WA. All matters between Seller and will Buyer be governed by the laws of the State of Washington. Buyer acknowledges that Seller's right to receive payments in current funds on the Account have been or will be assigned to Columbia Precast Products, LLC 1765 Howard Way, Woodland, WA, 98674. All indebtedness owed by Buyer to Seller shall be payable in Cowlitz County, Washington. Buyer further agrees to pay all amounts due on the Account, including interest and cost of collection, for all labor and materials supplied on the Account. Buyer agrees that all lien waivers will be effective only to the dollar amount of payments actually received. Buyer agrees that Seller retains its mechanic's lien, payment bond or similar security rights for unpaid deliveries under any and all circumstances, despite any documents or agreements that may state or imply otherwise. Buyer agrees to pay reasonable storage fees if materials are stored on Seller's yard more than sixty (60) days after Seller is ready for delivery.

2. **TAXES**: Unless otherwise stated, prices do not include any city, county, state, federal or other taxes imposed on the goods or service sold under this document. All such taxes now or hereafter in effect shall be added to the price and shall be paid by the Buyer.

3. **TITLE**: Title to the goods shall pass to the Buyer upon delivery at the destination specified by the Buyer and agreed to by the Seller. Seller preserves to itself, and Buyer hereby grants, a security interest in the goods which are the subject matter of this contract, to secure to Seller the full payment of the purchase price and any claim for damages on account of Buyer's breach.

4. **ASSIGNMENT**: Buyer shall not assign this contract or any interest therein nor shall Buyer delegate its performance hereunder, without the prior written consent of the Seller.

5. **DELAYS**: Seller shall not be liable for any special, incidental, direct, indirect, or consequential damages suffered by buyer due to delays in seller's performance of this contract, resulting, in whole or in part, from: fire or flood; strike or other differences with employees; war; riot; embargo; delays, losses, or damages in transportation; shortages of fuel or labor or materials; acts of civil or military authorities; or any other causes beyond the reasonable control of the seller. In case of the happening of any such delay, seller shall have such additional time within which to perform as may be reasonably necessary under the circumstances and shall have the right to apportion its production among its customers in such manner as it may consider to be equitable.

6. **WARRANTY DISCLAIMER**: seller makes no warranty of any kind whatsoever, express or implied, including warranties of merchantability and fitness for a particular purpose, except that the goods shall conform to the requirements of the project specifications, if any, at time of delivery.

7. **LIMITATIONS OF REMEDIES**: subject to paragraph 10 below, the buyer's sole and exclusive remedy with respect to any defective goods shall be limited to the repair or replacement, at seller's sole discretion, of any such goods by the seller at the f.o.b. point at which the goods were sold. This obligation of the seller shall terminate one (1) year after the delivery of the goods to the buyer. Seller shall in no event be liable for any special, direct, indirect, incidental or consequential damages suffered by the buyer due to any defective workmanship, defective goods or non-conformity with the applicable specifications of the goods delivered. Any buyer's remedies with respect thereto shall be limited exclusively as herein provided.

8. **CLAIMS**: Subject to paragraph 10 below, the Seller will not recognize any claims or back charges originated by the Buyer arising out of this contract unless the claims or back charges, as the case may be, are in writing and actually received by Seller within **one week from time of occurrence, giving full details.** Claims or back charges not presented within such time limit shall be deemed to have been waived by the Buyer. The Seller shall be given reasonable time and access to investigate the merits of such claims or back charges.

9. **DELIVERY**: Unless otherwise provided herein, the prices include delivery f.o.b. job site, trucks with maximum loads. F.o.b. job site means truck delivery as close to job site as is practicable, or to closest accessible storage area furnished free of charge to Seller for motor truck and trailer operating under its own power with maximum load. At delivery time, Buyer shall have an authorized representative present at the designated delivery point. At Buyer's expense, Buyer shall unload the goods using Buyer's equipment and labor unless arrangements for Seller to unload have been made no less than twenty-four (24) hours prior to scheduled delivery. If Buyer fails to have an authorized representative present at the delivery point, Seller shall unload the goods and Buyer shall be deemed to have accepted the same at that time. Subject to these terms and conditions, delivery equipment shall not be pushed or pulled by any power equipment nor shall Buyer cause the same to be done. Upon delivery, Buyer shall sign delivery tickets acknowledging such delivery and Buyer shall examine all goods delivered. Buyer shall, at the time of delivery, state in writing any and all defects and/or non-conformities as may exist in the goods delivered. Failure to do so at that time shall constitute a waiver of claims against Seller arising out of or relating to such defects and/or non-conformities. Buyer shall provide and maintain suitable access, including access roads, to job site, closest accessible point or designated storage area. Standby time in excess of one hour from the time of arrival of trucks at designated point of delivery will be charged to the account of the Buyer. Seller shall not be responsible for, or liable for damages arising out of or related to: (i) installation of the goods, (ii) preparation of the sub-grade, ground or site which is to receive the goods, (iii) settlement or other site conditions, and/or (iv) unforeseen or differing site conditions.

10. **RESTRICTED USE**: Buyer shall not, without the prior written consent of the Seller, use any of the goods which are the subject of the contract for any purpose except that herein mentioned, or remove any of the goods from the job site until the purchase price for all of the goods has been fully paid.

11. **BUYER'S SPECIFICATIONS**: Seller assumes no responsibility for the adequacy or performance of engineering, design, or specifications furnished by Buyer.

12. **NOTICE OF COMPLETION**: Seller may at its option, give Buyer written notice of the completion of the work herein specified by depositing same in the United States Mail properly stamped and addressed to Buyer at his last known address. If no written exception to said notice of completion or as to

the United States Mail properly stamped and addressed to Buyer at his last known address. If no written exception to said notice of completion or as to any part of the work performed hereunder is received by Seller within ten (10) days after the mailing or service of said notice of completion, said work shall be deemed to have been completed and accepted in accordance with the terms hereof.

13. **RETURN OF MATERIALS**: Standard goods shall not be returned by the Buyer without prior written acceptance by the Seller. A 20% restocking charge will be applied to all standard goods returned in re-saleable condition. No credit will be given on custom goods.

14. **CHANGES**: Any changes, corrections or deviations requested by Buyer after Buyer's acceptance of this contract shall be ineffective, unless and until Seller and Buyer agree to any additional costs or savings to be effected by such changes, corrections or deviations.

15. **WAIVER OF BREACH**: Waiver by Seller or Buyer of any breach of this contract shall not be considered a waiver of any other breach.

KSH CONSTRUCTION CO.

CHANGE ORDER / EXTRA WORK PROPOSAL

Work Description: **Additional costs to install In-Sidewalk Curb Inlet**
(costs above and beyond 24" square curbside CB installation)

Addt'l Contract Time: 0.5 days

Date(s) of Work: TBD

LABOR

		Hrs		Rate	Total
1	Supervisor/Foreman	0.5	ST Hrs	87.24	$43.62
			OT Hrs	121.21	$0.00
2	Operator	1	ST Hrs	84.64	$84.64
			OT Hrs	116.66	$0.00
3	Laborer (2 ea.)		ST Hrs	65.53	$0.00
			OT Hrs	88.29	$0.00
4	Flagger		ST Hrs	58.45	$0.00
			OT Hrs	77.66	$0.00
5	Truck Driver		ST Hrs	42.32	$0.00
			OT Hrs	59.63	$0.00
	Total Labor				$128.26
	Markup 22%				$28.22
	Subtotal				$156.48

MATERIAL

	Description	Qty	Unit	Rate	Total
1					$0.00
2					$0.00
3					$0.00
4					$0.00
5					$0.00
6					$0.00
	Total Material				$0.00
	Markup 17%				$0.00
	Subtotal				$0.00

EQUIPMENT

	Description	Qty	Unit	Rate	Total
1	KSH Service Truck w/ Small Tools	1	HRS	20.00	$20.00
2	Pick-up w/ Small Tools		HRS	14.00	$0.00
3	Dump Trailer		HRS	10.00	$0.00
4	Cat 314 Exc.	1	HRS	50.00	$50.00
5	Cat 420 Backhoe		HRS	35.00	$0.00
6	Cat 930 Loader		HRS	45.00	$0.00
7	Cat 304 Mini Exc		HRS	35.00	$0.00
8	Cat CS433 Roller		HRS	30.00	$0.00
9	Freightliner Dump Truck		HRS	60.00	$0.00
10	Trail Max 3-Axle Tilt Deck Trailer		HRS	25.00	$0.00
11	Freightliner Water Truck		HRS	35.00	$0.00
12	Air Compressor w/ 90# Breaker		HRS	25.00	$0.00
	Total Equipment				$70.00
	Markup 17%				$11.90
	Subtotal				$81.90

TRUCKING / SPECIAL SERVICES

	Description	Qty	Unit	Rate	Total
1					$0.00
2					$0.00
3					$0.00
	Total Trucking				$0.00
	Markup 17%				$0.00
	Subtotal				$0.00

SUBCONTRACTOR

	Description	Qty	Unit	Rate	Total
1	RLC (see attached)	1	LS	1,994.98	$1,994.98
2					$0.00
3					
	Total Subcontractor				$1,994.98
	Markup 8%				$159.60
	Subtotal				$2,154.58

GRAND TOTAL **$2,392.96**

32929 ROBERTS CT - COBURG, OR 97408
(541)302-6648 - FAX (541)302-6647
CCB: OREGON # 106364 - WASHINGTON # ROGERLC027P

ROGER LANGELIERS CONSTRUCTION CO.

Concrete Paving and Flatwork
Curb and Gutter • Catch Basins

QUOTATION

July 22, 2021

Thank you for the opportunity of submitting this quotation. Subject to acceptance within 15 days.

KSH

kelly

PROJECT: SW Harbor Dr. Newport

Public Wage

Please verify Qtys for Yourself as this is a Unit Price quote for items below only
Questions Please call. Rick Langeliers 541-302-6648

ITEM	QTY	UNIT	DESCRIPTION	UNIT PRICE	TOTAL PRICE
			Additional Work		
			CO.		
	1	EA	Furnish Inlet Top and Set and Pour(Base in place by others)	1,994.98	**1,994.98**
			You will need to supply backhoe to lift inlet and set on base		
			Rebid to include Inlet Top also		
				TOTAL BID:	**1,994.98**

Accepted and agreed: _____ *Dated:* _____

Authorized Representative

FURNISHED BY CUSTOMER

* Bond, Add 2%
* Plans (2 Sets) / All Erosion Control
* All Materials Testing / QCT
*All Finegrading for Concrete work
* Traffic Control /Joint Sealing if needed
*ALL SURVEY AND LAYOUT
* All Excavation, Except Catch Basins
*Offsite Disposal of Catch Basin Spoils
* Over-run Due to Low Grade (over 5%)
* Scheduling - 14 Day Notice Required
*Search for Catch Basin Pipe
Pipe to be Laid within 1ft of cb
*All Pipe Materials to Hook Up Catchbasins
*CatchBasin Over-depth(From Top of Curb
0' to 5' Bid Price
5' to 8' Add 150.00/Foot
Over 8' Add 300.00/Foot
* Wash Out Area & Clean-Up

* Retainage to be placed in an interest bearing account as per ORS 701.435

*** QUANTITIES ARE APPROXIMATE AND THE TOTAL PRICE WILL VARY BASED ON ACTUAL QUANTITIES INSTALLED. * PAYMENT TERMS ARE NET 30 DAYS FROM DATE OF INVOICE. * OVERDUE ACCOUNTS SUBJECT TO A LATE CHARGE OF 1% PER MONTH.**

*** CUSTOMER SHALL PAY ALL COSTS, EXPENSES AND REASONABLE ATTORNEYS' FEES INCURRED BY RLC IN ANY SUIT, ARBITRATION, MEDIATION, BANKRUPTCY PROCEEDING, AND POST-JUDGMENT PROCEEDING (AND ANY APPEAL OF THE FOREGOING) TO COLLECT ANY AMOUNT DUE.**

NOTE:

1. ALL CONCRETE MINIMUM 3500 PSI @ 28 DAYS
2. ALL SIZES AVAILABLE IN INSIDE AND OUTSIDE RADIUS FOR CULDE-SAC AND CURB RETURNS
3. BY ENCLOSING THE OPENING, THE INLET MAY BE USED FOR JUNCTION BOX APPLICATIONS
4. 37/8" X 23 1/4" FLANGE UP MANHOLE RING AND COVER BY INLAND FOUNDRY
5. 2 HOLE DIAMOND SKID WITH ONE PICK NOTCH SUITABLE FOR H-20 LOAD

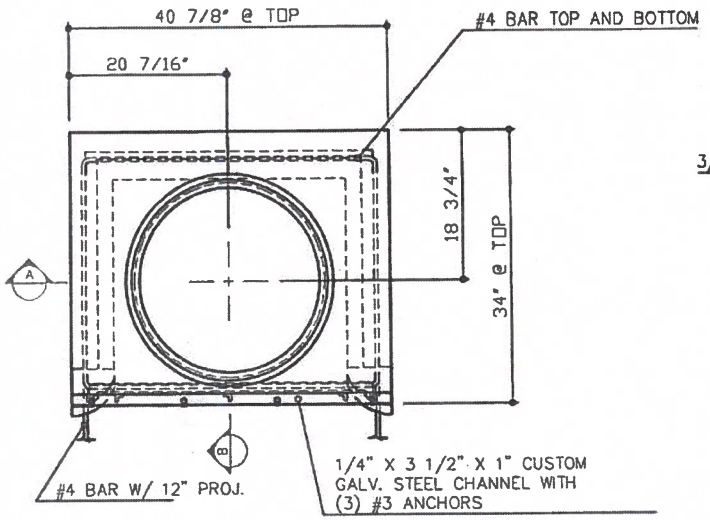

PLAN VIEW

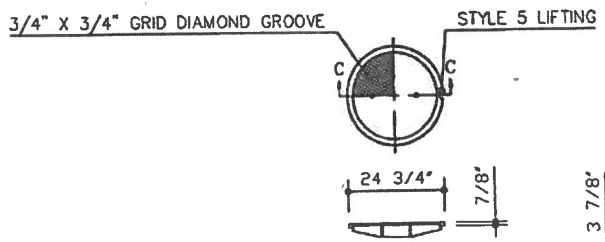

SECTION C–C
DRAWN 1/2:1

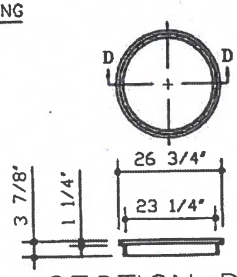

SECTION D–D
DRAWN 1/2:1

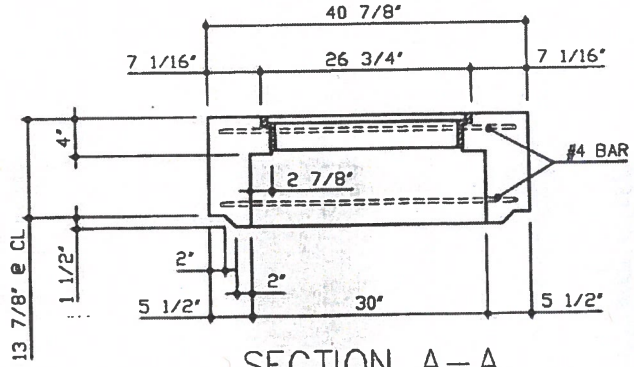

SECTION A–A

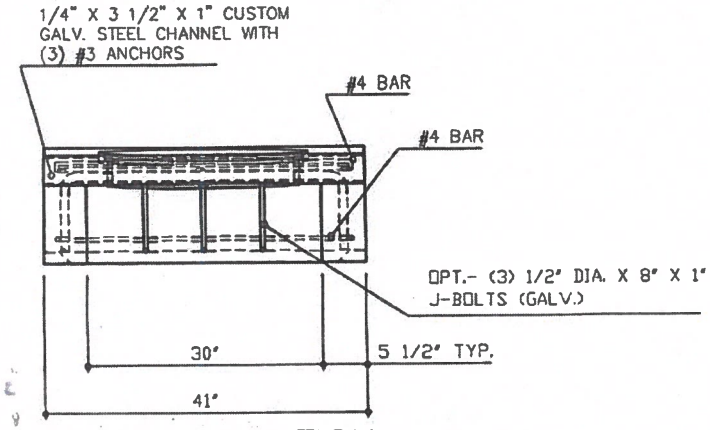

FRONT ELEVATION

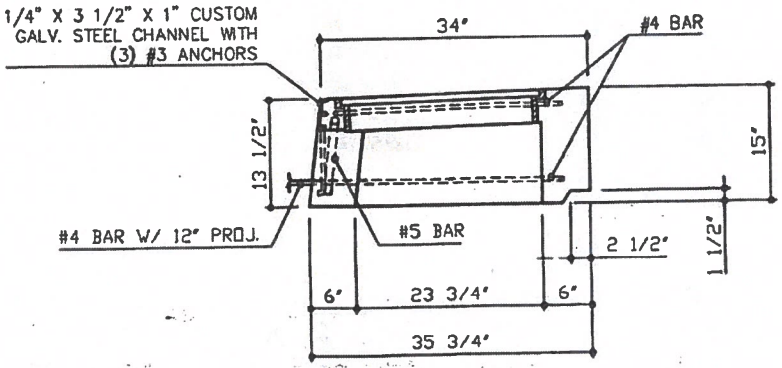

SECTION B–B

REVISION	BY

Roger Langelieres Const.
32929 Roberts Court
Coburg OR 97408
541-302-6648

STORM DRAIN INLET
MODEL 30

DATE:	1-13-96
DRAWN BY:	SKM
SCALE:	1" = 24"
SHEET:	1 OF 1

C6-3/2½A

KSH CONSTRUCTION CO.

CHANGE ORDER / EXTRA WORK PROPOSAL

Work Description: **Sawcut, Demo. & Remove Addt'l AC for CO#2 concrete extension**

Addt'l Contract Time: 1 day(s)

Date(s) of Work: August 2, 2021

LABOR

		Hrs		Rate	Total
1	Supervisor/Foreman		ST Hrs	87.24	$0.00
			OT Hrs	121.21	$0.00
2	Operator	0.5	ST Hrs	84.64	$42.32
			OT Hrs	116.66	$0.00
3	Laborer (2 ea.)	1	ST Hrs	65.53	$65.53
			OT Hrs	88.29	$0.00
4	Flagger		ST Hrs	58.45	$0.00
			OT Hrs	77.66	$0.00
5	Truck Driver	0.5	ST Hrs	42.32	$21.16
			OT Hrs	59.63	$0.00
	Total Labor				$129.01
	Markup 22%				$28.38
	Subtotal				$157.39

MATERIAL

	Description	Qty	Unit	Rate	Total
1					$0.00
2					$0.00
3					$0.00
4					$0.00
5					$0.00
6					$0.00
	Total Material				$0.00
	Markup 17%				$0.00
	Subtotal				$0.00

EQUIPMENT

	Description	Qty	Unit	Rate	Total
1	KSH Service Truck w/ Small Tools	0.5	HRS	20.00	$10.00
2	Pick-up w/ Small Tools		HRS	14.00	$0.00
3	Dump Trailer		HRS	10.00	$0.00
4	Cat 314 Exc.		HRS	50.00	$0.00
5	Cat 420 Backhoe		HRS	35.00	$0.00
6	Cat 930 Loader		HRS	45.00	$0.00
7	Cat 304 Mini Exc	0.5	HRS	35.00	$17.50
8	Cat CS433 Roller		HRS	30.00	$0.00
9	Freightliner Dump Truck	0.5	HRS	60.00	$30.00
10	Trail Max 3-Axle Tilt Deck Trailer		HRS	25.00	$0.00
11	Freightliner Water Truck		HRS	35.00	$0.00
12	Air Compressor w/ 90# Breaker		HRS	25.00	$0.00
	Total Equipment				$57.50
	Markup 17%				$9.78
	Subtotal				$67.28

TRUCKING / SPECIAL SERVICES

	Description	Qty	Unit	Rate	Total
1					$0.00
2					$0.00
3					$0.00
	Total Trucking				$0.00
	Markup 17%				$0.00
	Subtotal				$0.00

SUBCONTRACTOR

	Description	Qty	Unit	Rate	Total
1					$0.00
2					$0.00
3					
	Total Subcontractor				$0.00
	Markup 8%				$0.00
	Subtotal				$0.00

GRAND TOTAL **$224.67**

NEWPORT

OREGON

AUTHORIZATION FOR AGREEMENTS, MOUs, OR OTHER DOCUMENTS OBLIGATING THE CITY

All contracts, agreements, grant agreements, memoranda of understanding, or any document obligating the city (with the exception of purchase orders), requires the completion of this form. The City Manager will sign these documents after all other required information and signatures are obtained.

Document: Harbor Drive Storm Drain Improvement Project - Change Order #3
Date: 8/13/21

Statement of Purpose: Subsurface discoveries, concrete modifications, corrections for survey errors

Department Head Signature: _____

Remarks, if any: __None_____

City Attorney Review and Signature: _____ Date: 8/26/2021

Other Signatures as Requested by the City Attorney: _____
Name/Position

_____ Date: _____
Signature

Budget Confirmed: Yes ☒ No ☐ N/A ☐

Certificate of Insurance Attached: Yes ☐ No ☐ N/A ☒

City Council Approval Needed: Yes ☐ No ☒ Date:

After all the above requested information is complete and signatures obtained, return this form, along with the original document to the City Manager for signature. No documents should be executed prior to the City Manager's approval as evidenced by signature of this document.

City Manager Signature: _____ Date: 8/27-21

Once all signatures and certificates of insurance have been obtained, return this document, along with the original, fully-executed agreement, MOU, or other document to the City Recorder. A copy of grant agreement and all project funding documents, must be forwarded to the Finance Department for tracking and audit purposes.

City Recorder Signature: _____ Date: 9/23/2021

Date posted on website: _____